KiliManjaro 2.0

(Montevina DDR3)

Pre-MV Build 2008.06.19

DATE	CHANGE NO.	REV

	EE	DATE	POWER	DATE
DRAWER				
DESIGN				
CHECK				
RESPONSIBLE				

SIZE = 3 VER :

FILE NAME : XXXX-XXXXXX-XX

P/N XXXXXXXXXXXX

INVENTEC

TITLE *KiliManjaro 2.0(Montevina)*

SIZE	CODE	DOC. NUMBER	REV
A3	CS	1310A2207301-0-MP02	0.02

SHEET 1 OF 58

http://hobi-elektronika.net

TABLE OF CONTENTS

PAGE

MAINBOARD

1.COVER PAGE
2.INDEX
3.BLOCK DIAGRAM
4.POWER SEQUENCE BLOCK
5-12.SYSTEM POWER
13.CLOCK GENERATOR
14-17.CPU Penryn
18.FAN & THERMAL CONTROLLER
19-25.N/B Cantiga
26.DDR2 DIMM0
27.DDR2 DIMM1
28.DDR DAMPING
29.MXM CONN
30.CRT CONN
31.HDMI CONN
32.LCD CONN
33-37.S/B ICH9
38.EXPRESS CARD

PAGE

39.CARD READER
40.LAN CONTROLLER
41.RJ45 & TRANSFORMER
42.MINI CARD CONN
43.ODD & HDD CONN
44.USB CONN/ESATA
45.BT & LED & CIR & SW
46.KBC
47.CODEC
48-49.AUDIO AMP&JACK
50.MDC
51.SCREW & EMI
52.TO OTHER BOARD CONN

PAGE

SMALL BOARD

53.IO BOARD(TV Tuner or Robson)
54. USB & TV BOARD
55. PWR JACK LED BOARD
56. PWR BUTTON & LID BOARD
57.E-KEY BOARD
58.TH-BUTTON BOARD
59.HOTKEY BOARD

http://hobi-elektronika.net

CHANGE by	Drawer_Name	6-Jun-2008	
INVENTEC			
TITLE	KiliManjaro 2.0(Montevina)		
SIZE A3	CODE CS	DOC. NUMBER 1310A2207301-0-M/B	REV 1.02
SHEET 2	OF 58		

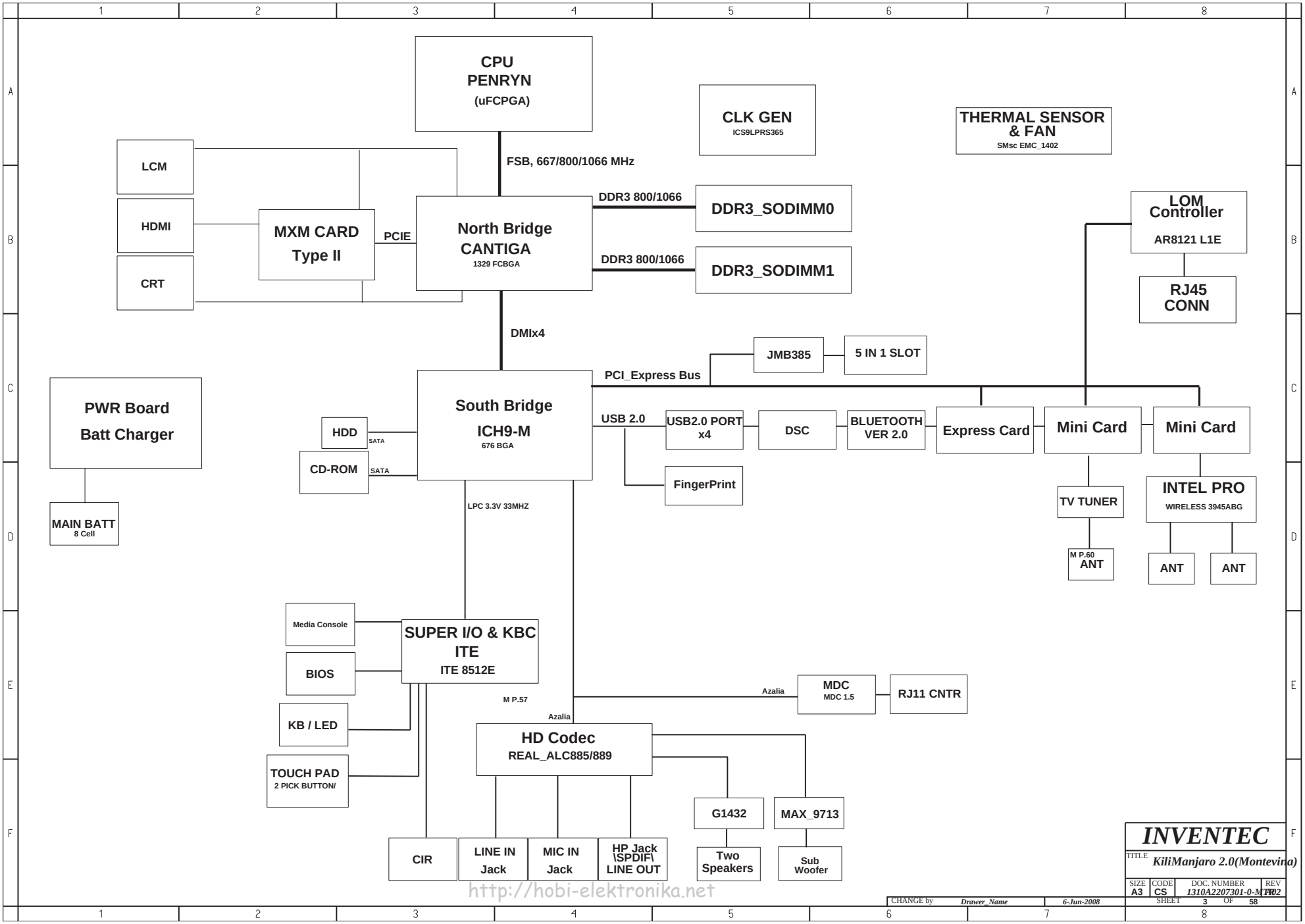

http://hobi-elektronika.net

CHANGE by	Drawer_Name	6-Jun-2008	

INVENTEC

TITLE *KiliManjaro 2.0(Montevina)*

SIZE	CODE	DOC. NUMBER	REV
A3	CS	1310A2207301-0-M02	1.02

SHEET 3 OF 58

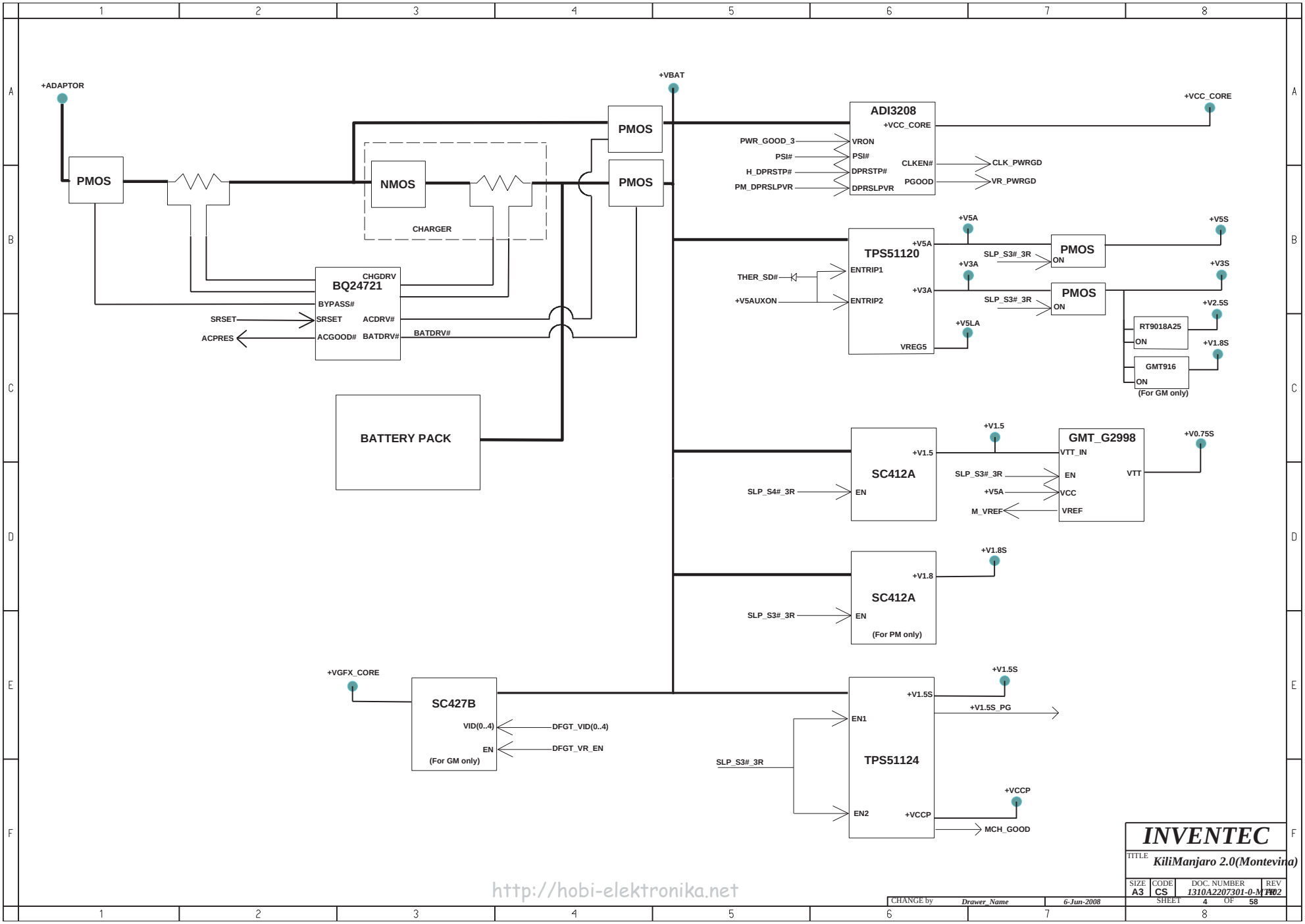

http://hobi-elektronika.net

INVENTEC			
TITLE KiliManjaro 2.0(Montevina)			
SIZE A3	CODE CS	DOC. NUMBER 1310A2207301-0-M1-02	REV 1.02
CHANGE by Drawer_Name	6-Jun-2008	SHEET 4 OF 58	

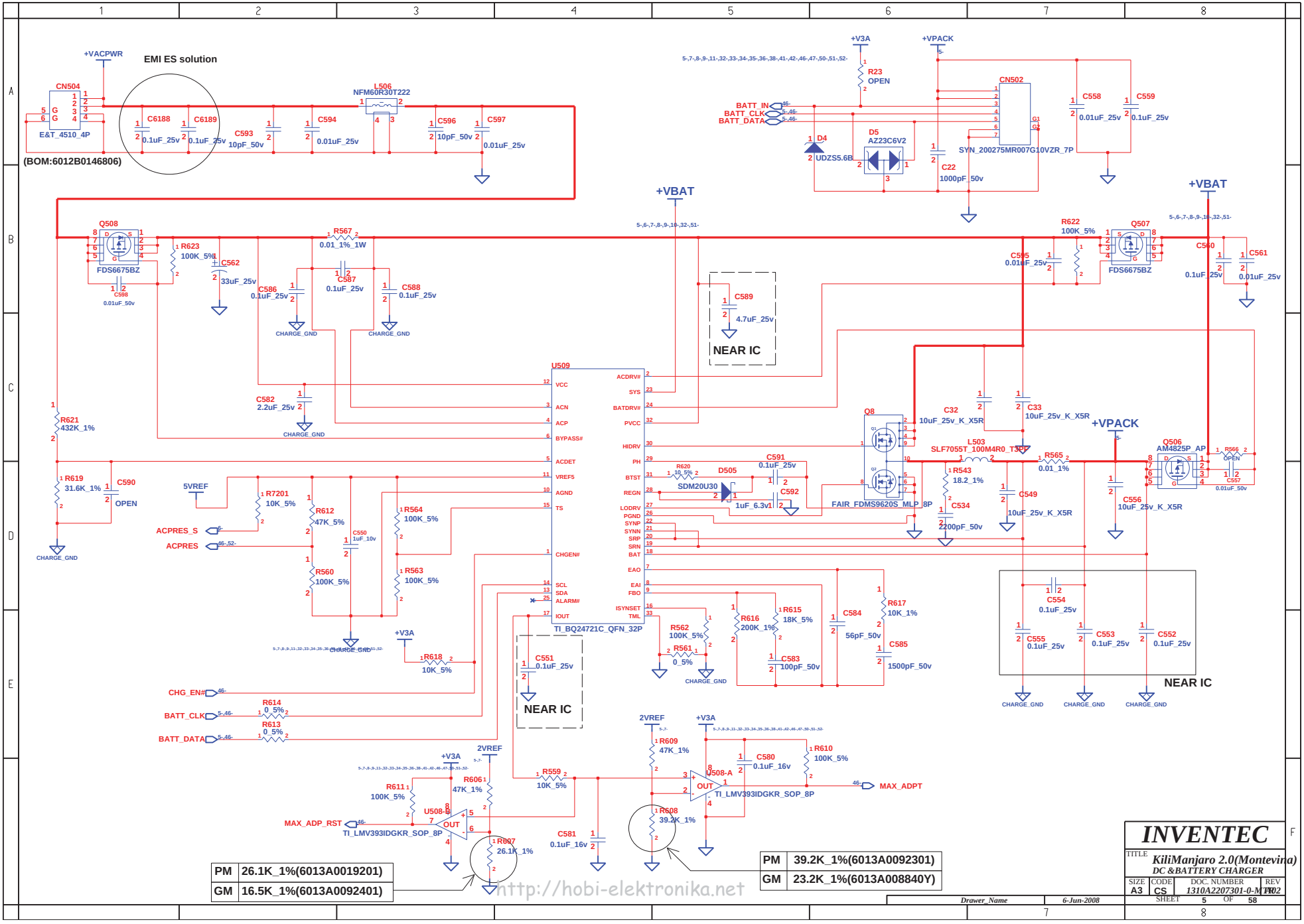

http://hobi-elektronika.net

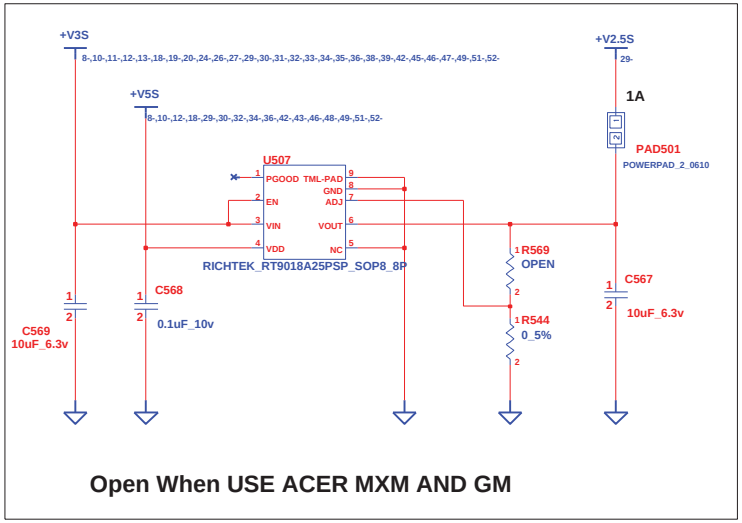

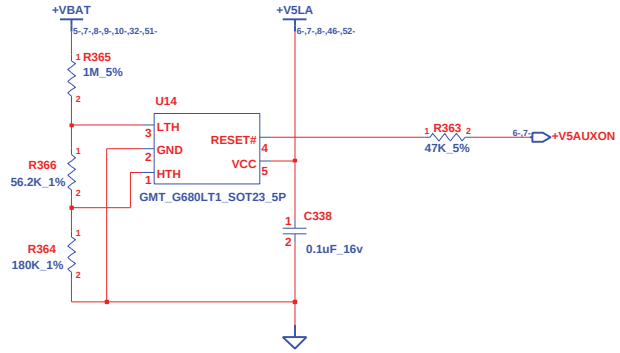

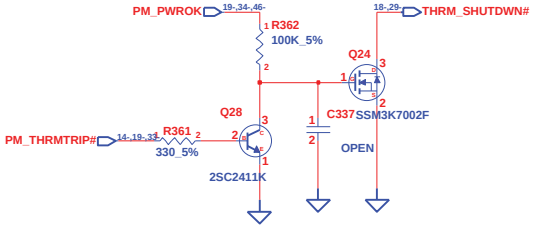

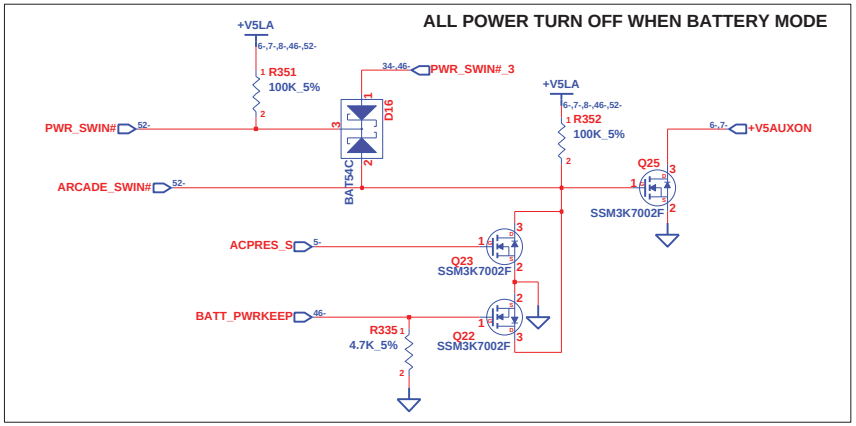

http://hobi-elektronika.net

CHANGE by	Drawer_Name	6-Jun-2008	

INVENTEC

TITLE *KiliManjaro 2.0(Montevina)*
+V2.5S / RESET

SIZE	CODE	DOC. NUMBER	REV
A3	CS	1310A2207301-0-M1	02

SHEET 6 OF 58

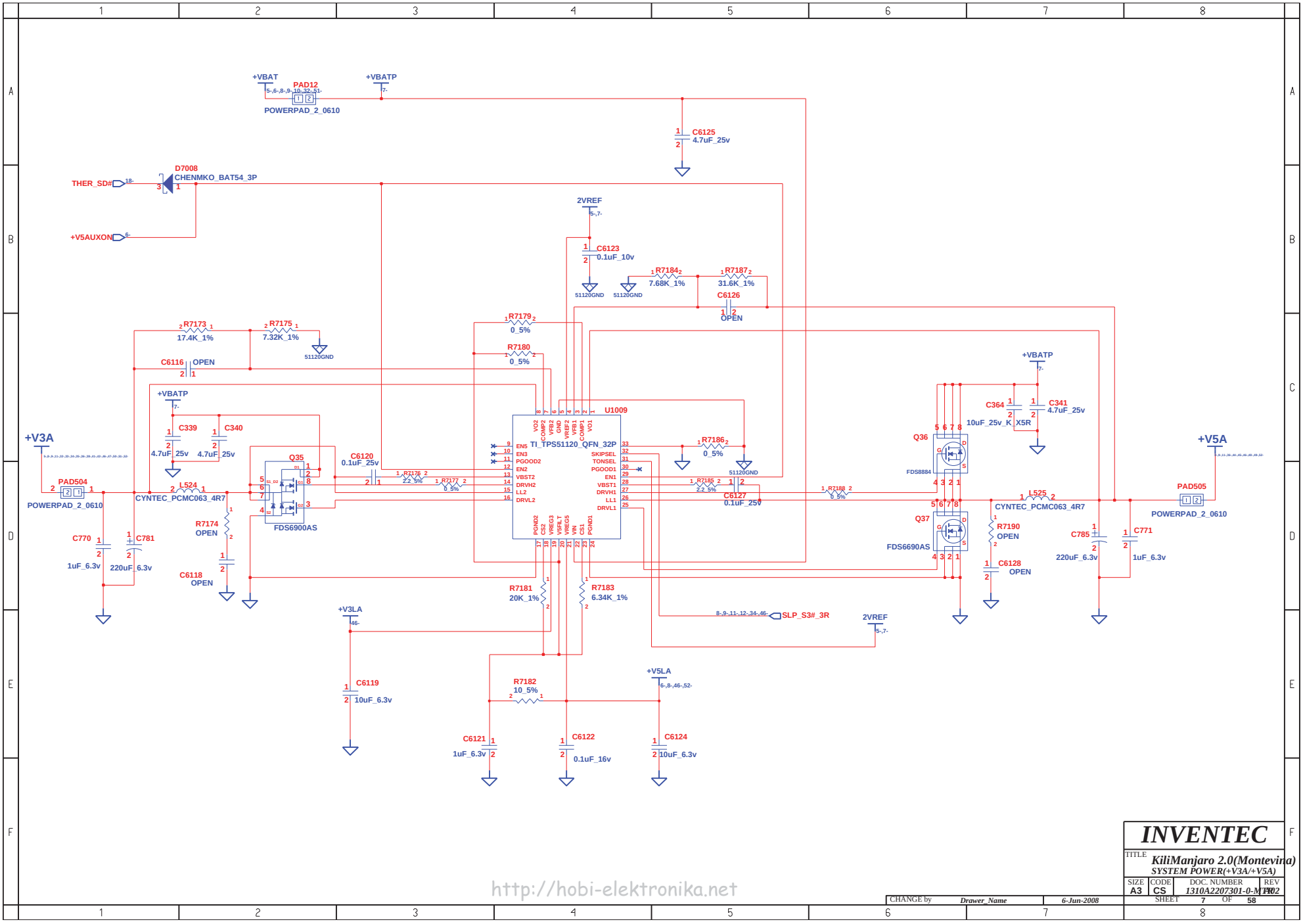

http://hobi-elektronika.net

CHANGE by	Drawer_Name	6-Jun-2008	

INVENTEC

TITLE: *KiliManjaro 2.0(Montevina)*
SYSTEM POWER(+V3A/+V5A)

SIZE	CODE	DOC. NUMBER	REV
A3	CS	1310A2207301-0-M1-02	1.0

SHEET 7 OF 58

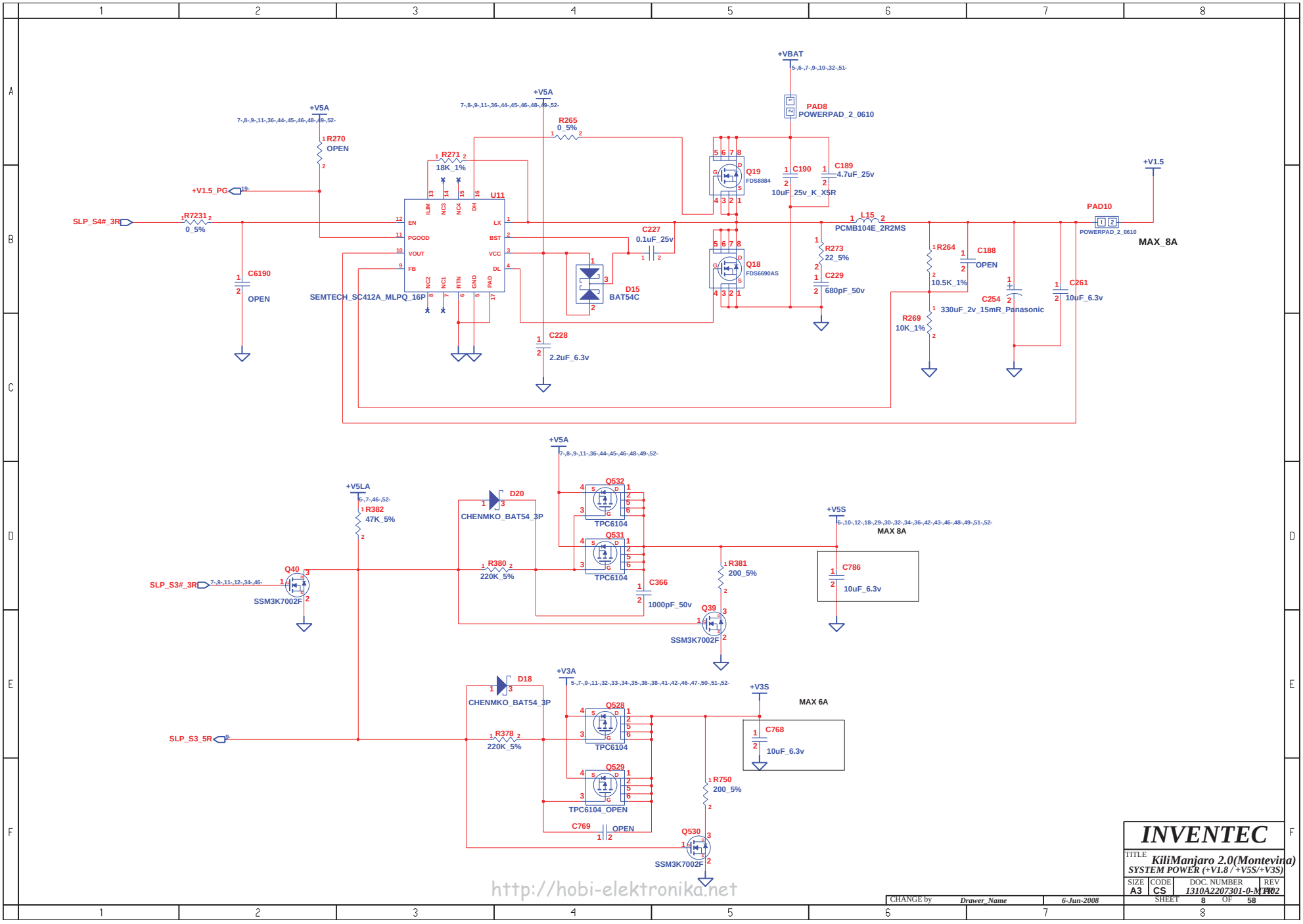
+VBAT
5-,6-,7-,9-,10-,32-,51-
PAD8
POWERPAD_2_0610
+V5A
7-,8-,9-,11-,36-,44-,45-,46-,48-,49-,52-
R270
OPEN
R265
0_5%
R271
18K_1%
+V1.5_PG
SLP_S4#_3R
R7231
0_5%
U11
EN
PGOOD
VOUT
FB
LX
BST
VCC
DL
ILIM
NC3
NC4
DH
NC2
NC1
RTN
GND
PAD
SEMTECH_SC412A_MLPQ_16P
C6190
OPEN
C227
0.1uF_25v
D15
BAT54C
C228
2.2uF_6.3v
Q19
FDS8884
Q18
FDS6690AS
C190
10uF_25v_K_X5R
C189
4.7uF_25v
R273
22_5%
C229
680pF_50v
L15
PCMB104E_2R2MS
R264
10.5K_1%
R269
10K_1%
C188
OPEN
C254
330uF_2v_15mR_Panasonic
C261
10uF_6.3v
+V1.5
PAD10
POWERPAD_2_0610
MAX_8A
+V5LA
6-,7-,46-,52-
R382
47K_5%
D20
CHENMKO_BAT54_3P
Q532
TPC6104
Q531
TPC6104
R380
220K_5%
C366
1000pF_50v
Q40
SSM3K7002F
SLP_S3#_3R
7-,9-,11-,12-,34-,46-
Q39
SSM3K7002F
R381
200_5%
+V5S
6-,10-,12-,18-,29-,30-,32-,34-,36-,42-,43-,46-,48-,49-,51-,52-
MAX 8A
C786
10uF_6.3v
+V3A
5-,7-,9-,11-,32-,33-,34-,35-,36-,38-,41-,42-,46-,47-,50-,51-,52-
D18
CHENMKO_BAT54_3P
SLP_S3_5R
R378
220K_5%
Q528
TPC6104
Q529
TPC6104_OPEN
C769
OPEN
+V3S
MAX 6A
C768
10uF_6.3v
R750
200_5%
Q530
SSM3K7002F
INVENTEC
TITLE
KiliManjaro 2.0(Montevina)
SYSTEM POWER (+V1.8 / +V5S/+V3S)
SIZE A3
CODE CS
DOC. NUMBER 1310A2207301-0-M1-02
REV
SHEET 8 OF 58
CHANGE by Drawer_Name
6-Jun-2008
http://hobi-elektronika.net

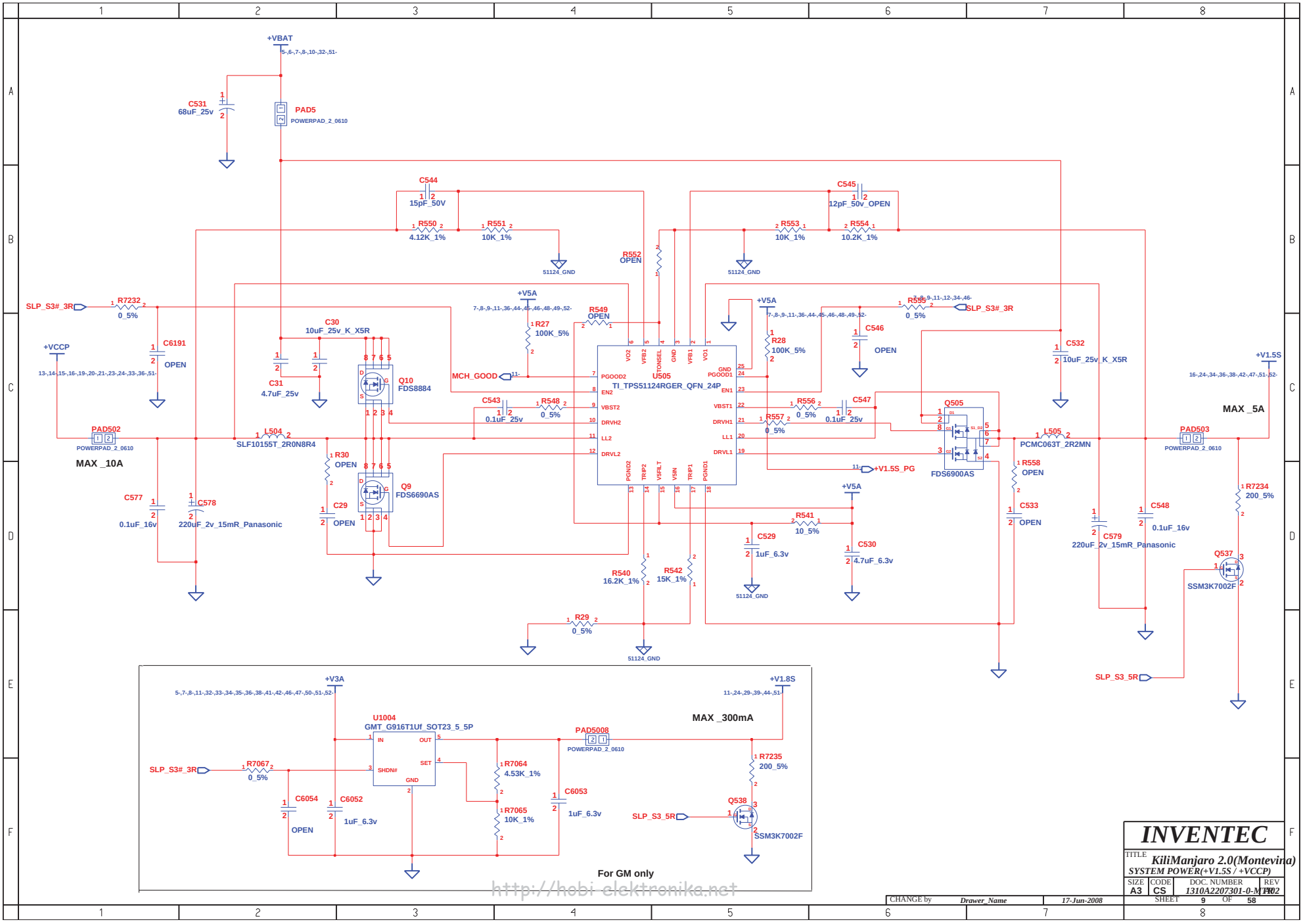

CHANGE by	Drawer_Name	17-Jun-2008	

INVENTEC

TITLE: *KiliManjaro 2.0(Montevina)*
SYSTEM POWER(+V1.5S / +VCCP)

SIZE	CODE	DOC. NUMBER	REV
A3	CS	1310A2207301-0-MT02	1.0

SHEET 9 OF 58

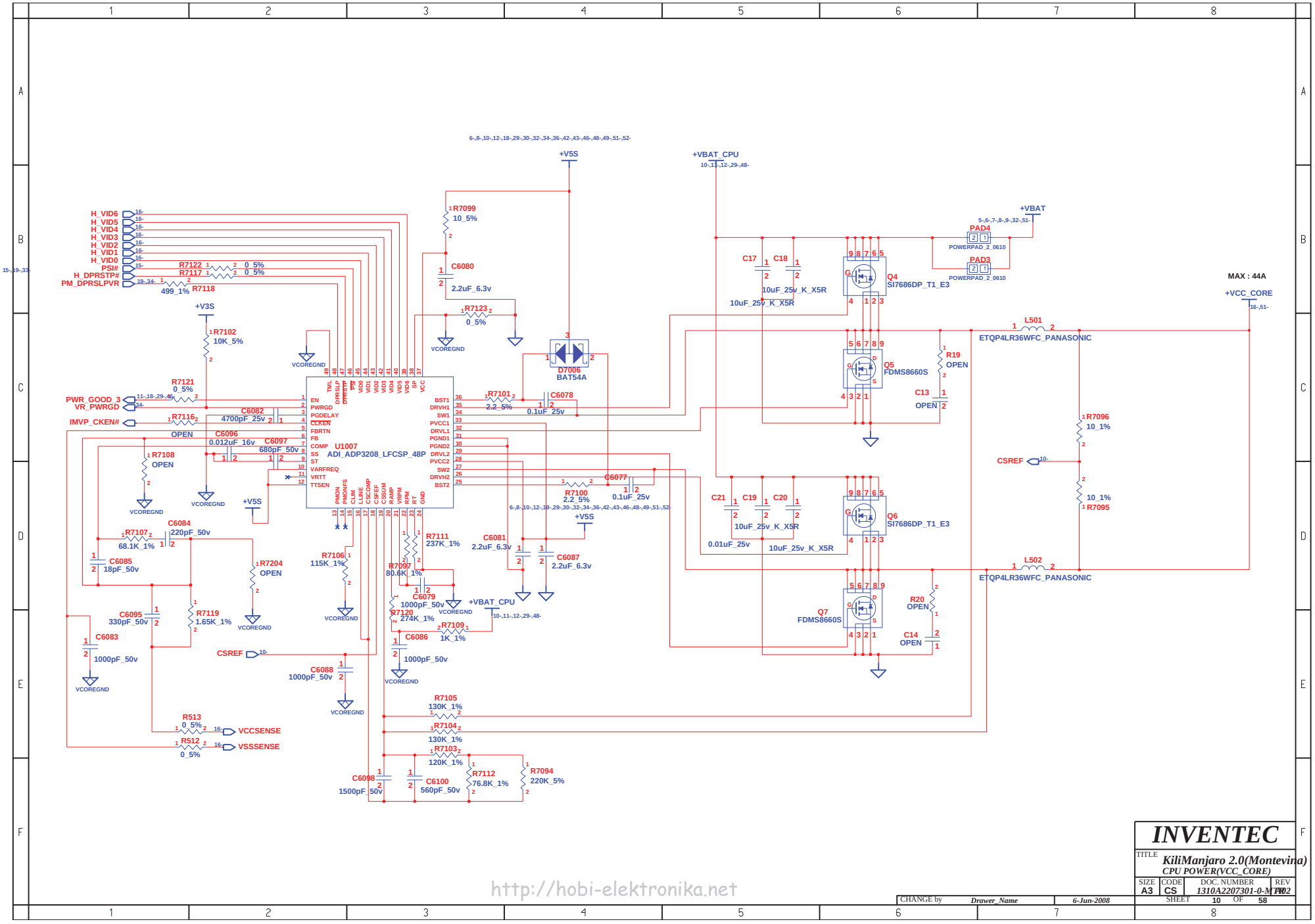

http://hobi-elektronika.net

INVENTEC			
TITLE	KiliManjaro 2.0(Montevina) CPU POWER(VCC_CORE)		
SIZE A3	CODE CS	DOC. NUMBER 1310A2207301-0-M1102	REV 1.02
CHANGE by Drawer_Name	6-Jun-2008	SHEET 10 OF 58	

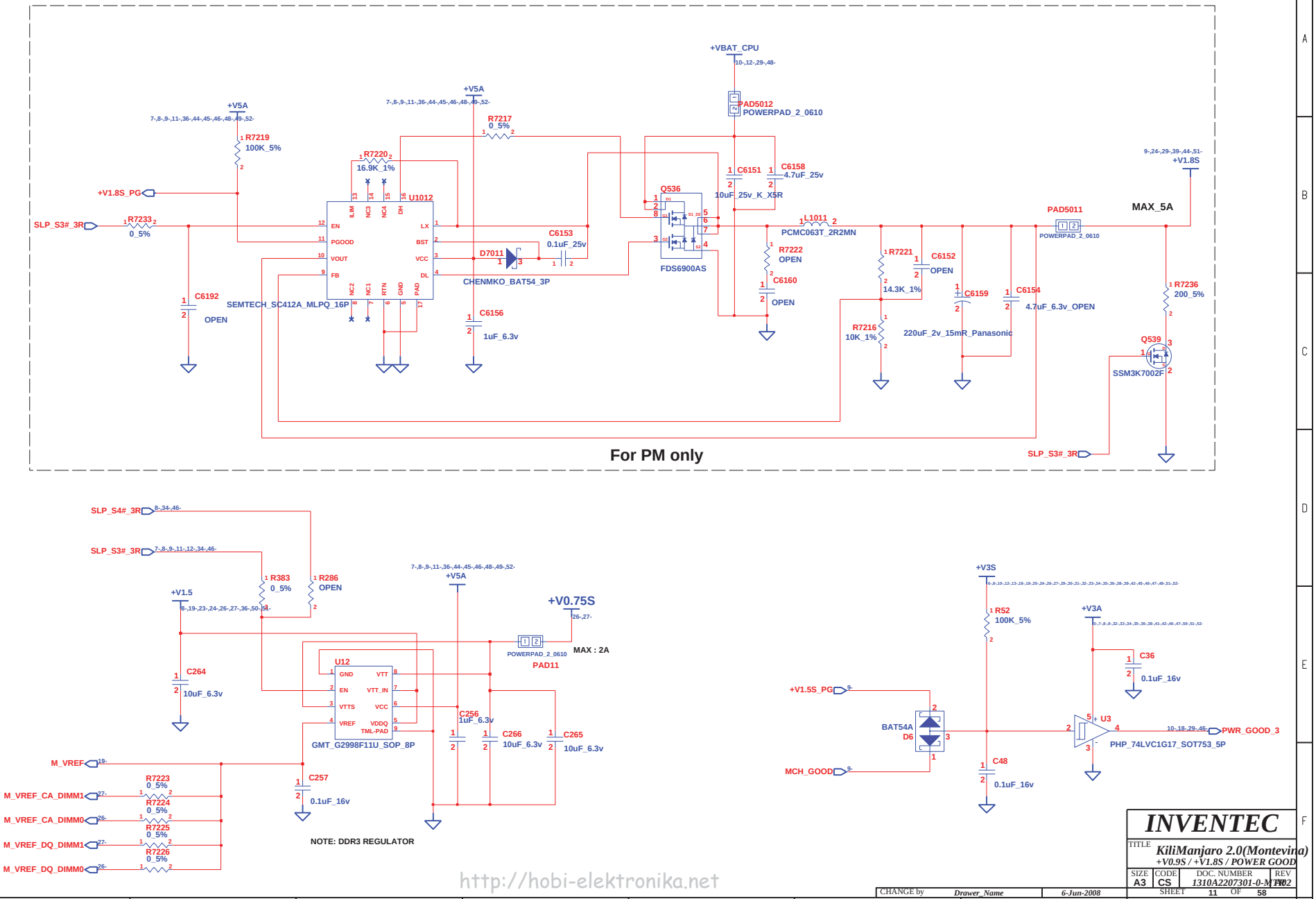

http://hobi-elektronika.net

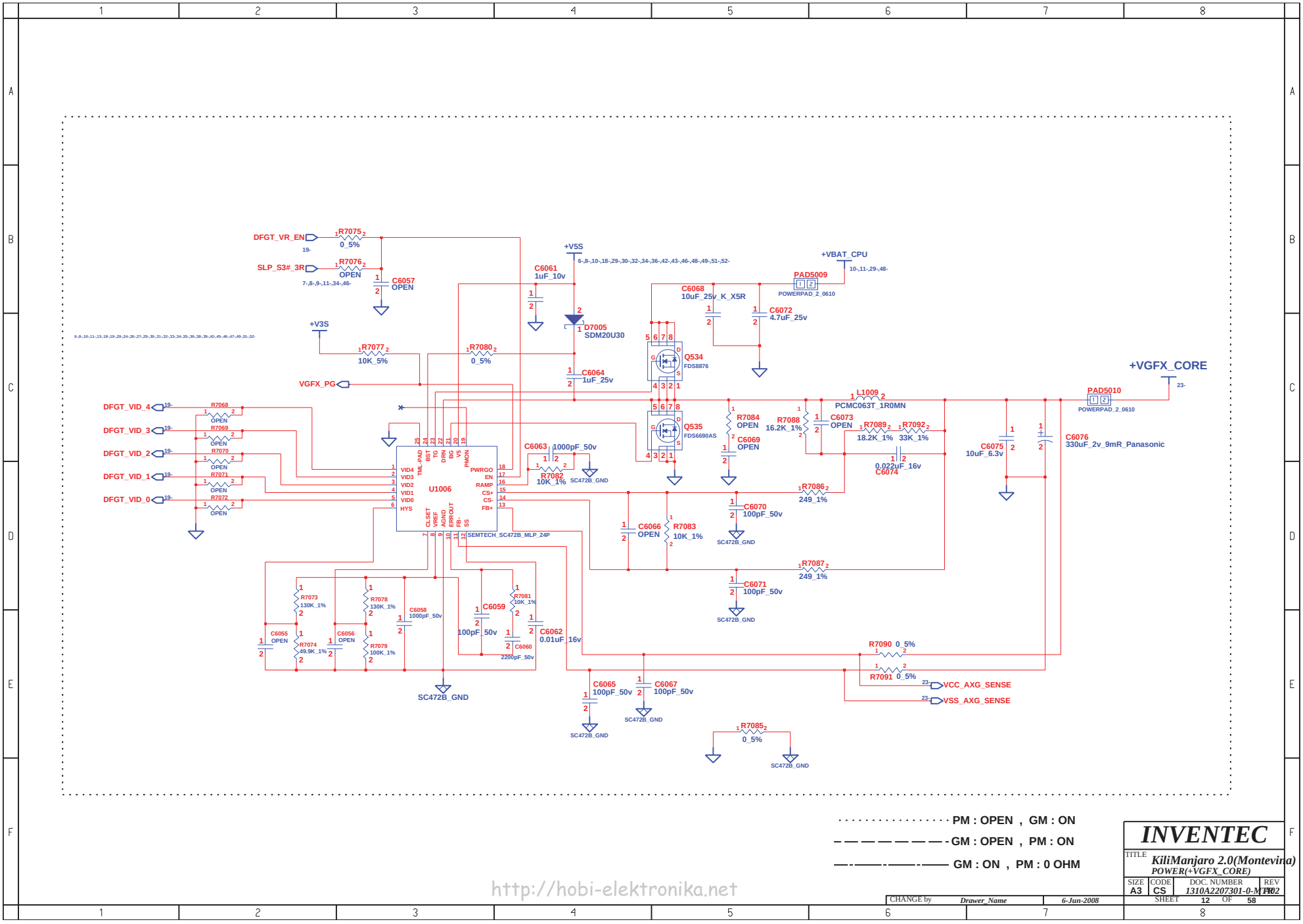

PM : OPEN , GM : ON

GM : OPEN , PM : ON

GM : ON , PM : 0 OHM

http://hobi-elektronika.net

CHANGE by	Drawer_Name	6-Jun-2008	

INVENTEC

TITLE: KiliManjaro 2.0(Montevina) POWER(+VGFX_CORE)

SIZE	CODE	DOC. NUMBER	REV
A3	CS	1310A2207301-0-M1	02

SHEET 12 OF 58

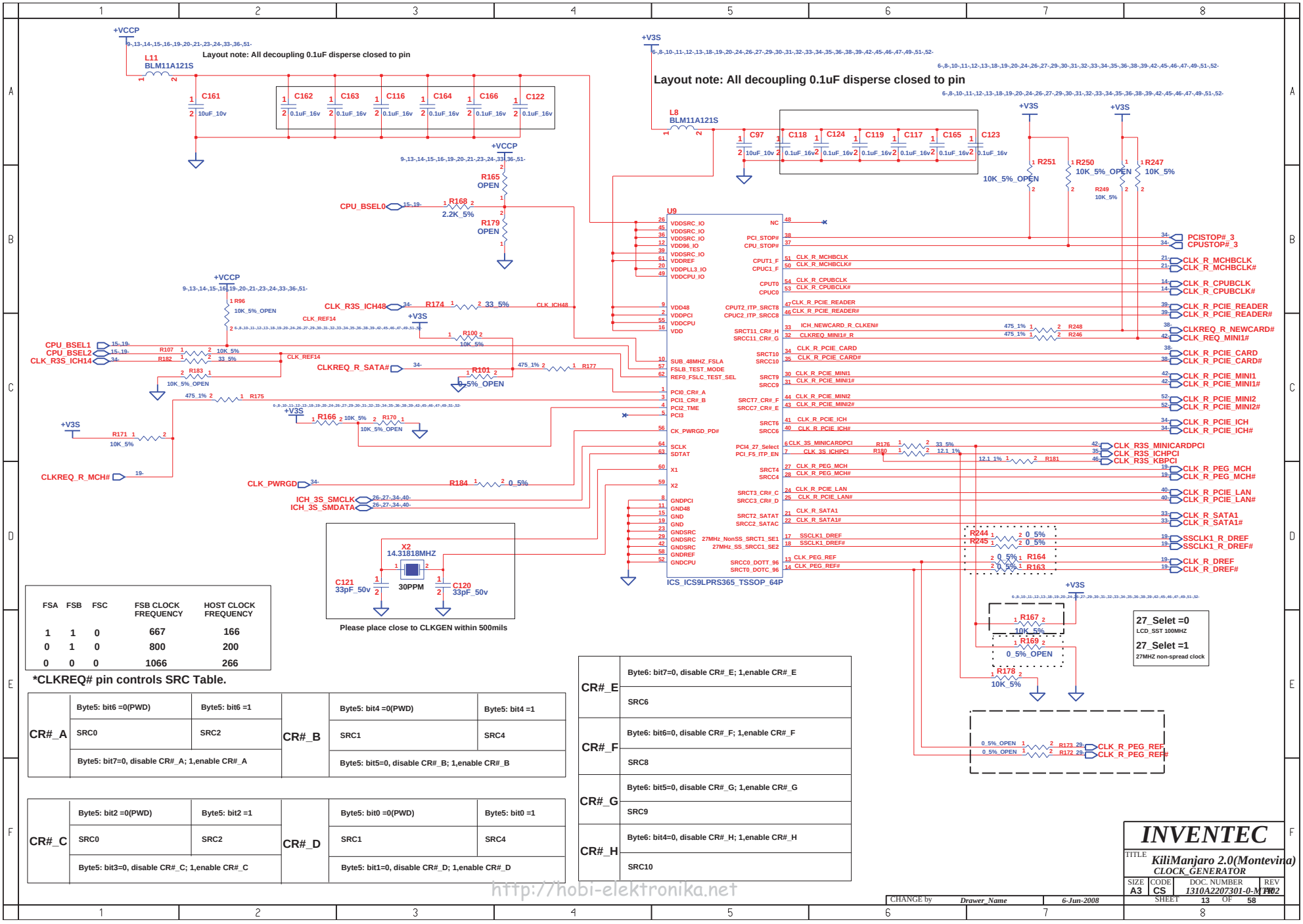

FSA	FSB	FSC	FSB CLOCK FREQUENCY	HOST CLOCK FREQUENCY
1	1	0	667	166
0	1	0	800	200
0	0	0	1066	266

***CLKREQ# pin controls SRC Table.**

CR#_A	Byte5: bit6 =0(PWD)	Byte5: bit6 =1	CR#_B	Byte5: bit4 =0(PWD)	Byte5: bit4 =1
	SRC0	SRC2		SRC1	SRC4
	Byte5: bit7=0, disable CR#_A; 1,enable CR#_A			Byte5: bit5=0, disable CR#_B; 1,enable CR#_B	

CR#_C	Byte5: bit2 =0(PWD)	Byte5: bit2 =1	CR#_D	Byte5: bit0 =0(PWD)	Byte5: bit0 =1
	SRC0	SRC2		SRC1	SRC4
	Byte5: bit3=0, disable CR#_C; 1,enable CR#_C			Byte5: bit1=0, disable CR#_D; 1,enable CR#_D	

CR#_E	Byte6: bit7=0, disable CR#_E; 1,enable CR#_E
	SRC6
CR#_F	Byte6: bit6=0, disable CR#_F; 1,enable CR#_F
	SRC8
CR#_G	Byte6: bit5=0, disable CR#_G; 1,enable CR#_G
	SRC9
CR#_H	Byte6: bit4=0, disable CR#_H; 1,enable CR#_H
	SRC10

http://hobi-elektronika.net

CHANGE by	Drawer_Name	6-Jun-2008	

INVENTEC

TITLE: *KiliManjaro 2.0(Montevina)*
CLOCK_GENERATOR

SIZE	CODE	DOC. NUMBER	REV
A3	CS	1310A2207301-0-M1	02

SHEET 13 OF 58

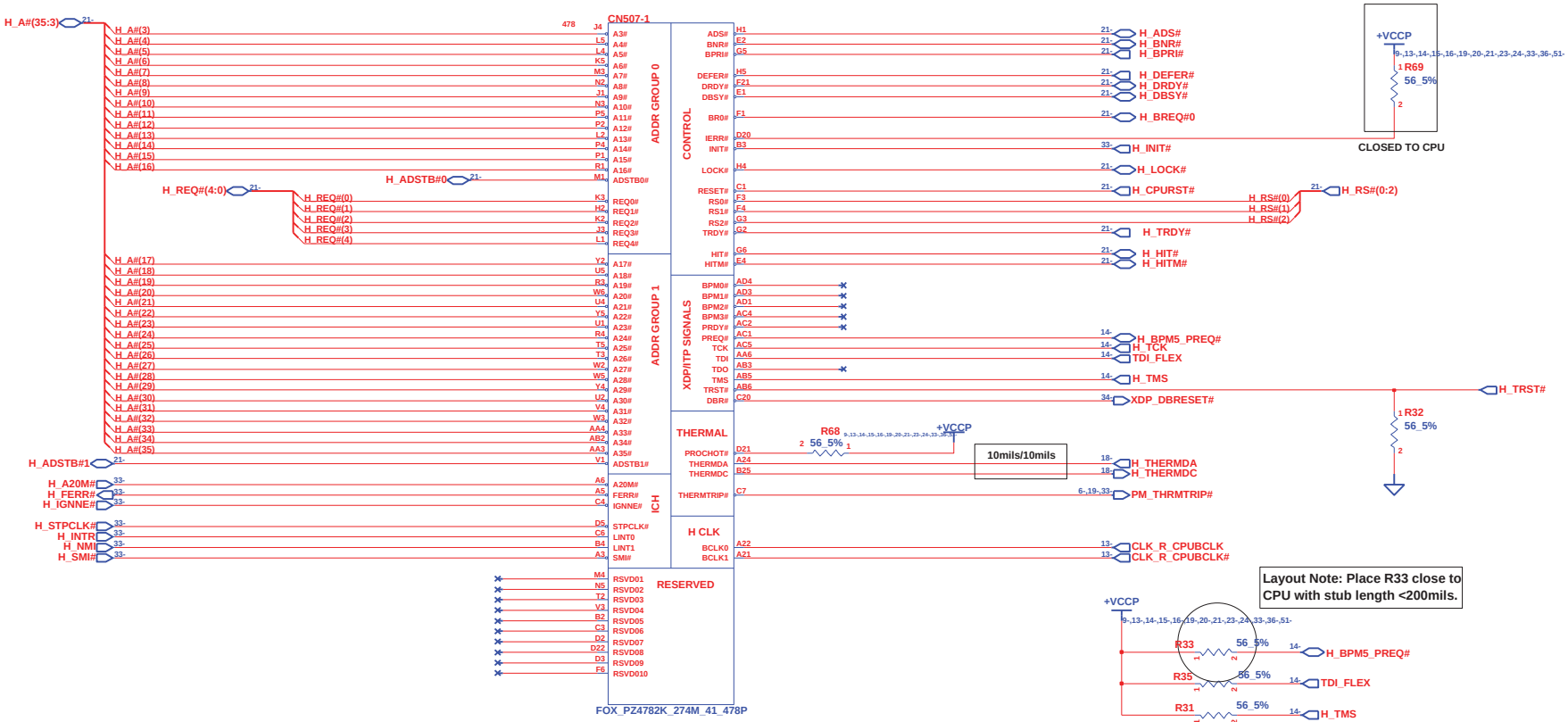

http://hobi-elektronika.net

INVENTEC			
TITLE	KiliManjaro 2.0(Montevina) Penryn-1		
SIZE A3	CODE CS	DOC. NUMBER 1310A2207301-0-M1-02	REV
CHANGE by Drawer_Name	6-Jun-2008	SHEET 14 OF 58	

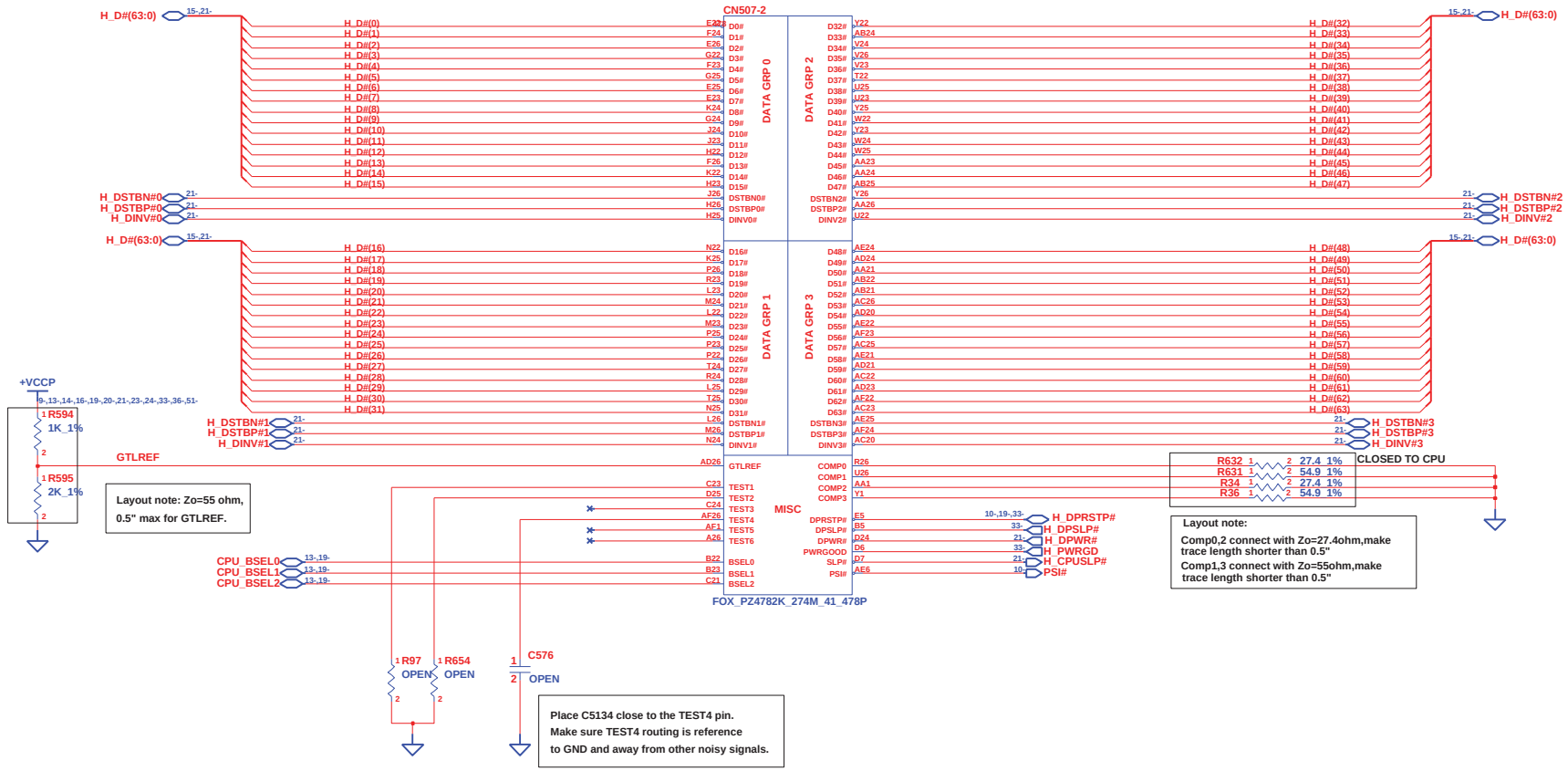

http://hobi-elektronika.net

INVENTEC			
TITLE	KiliManjaro 2.0(Montevina) Penryn-2		
SIZE A3	CODE CS	DOC. NUMBER 1310A2207301-0-M1-02	REV
CHANGE by Drawer_Name	6-Jun-2008	SHEET 15 OF 58	

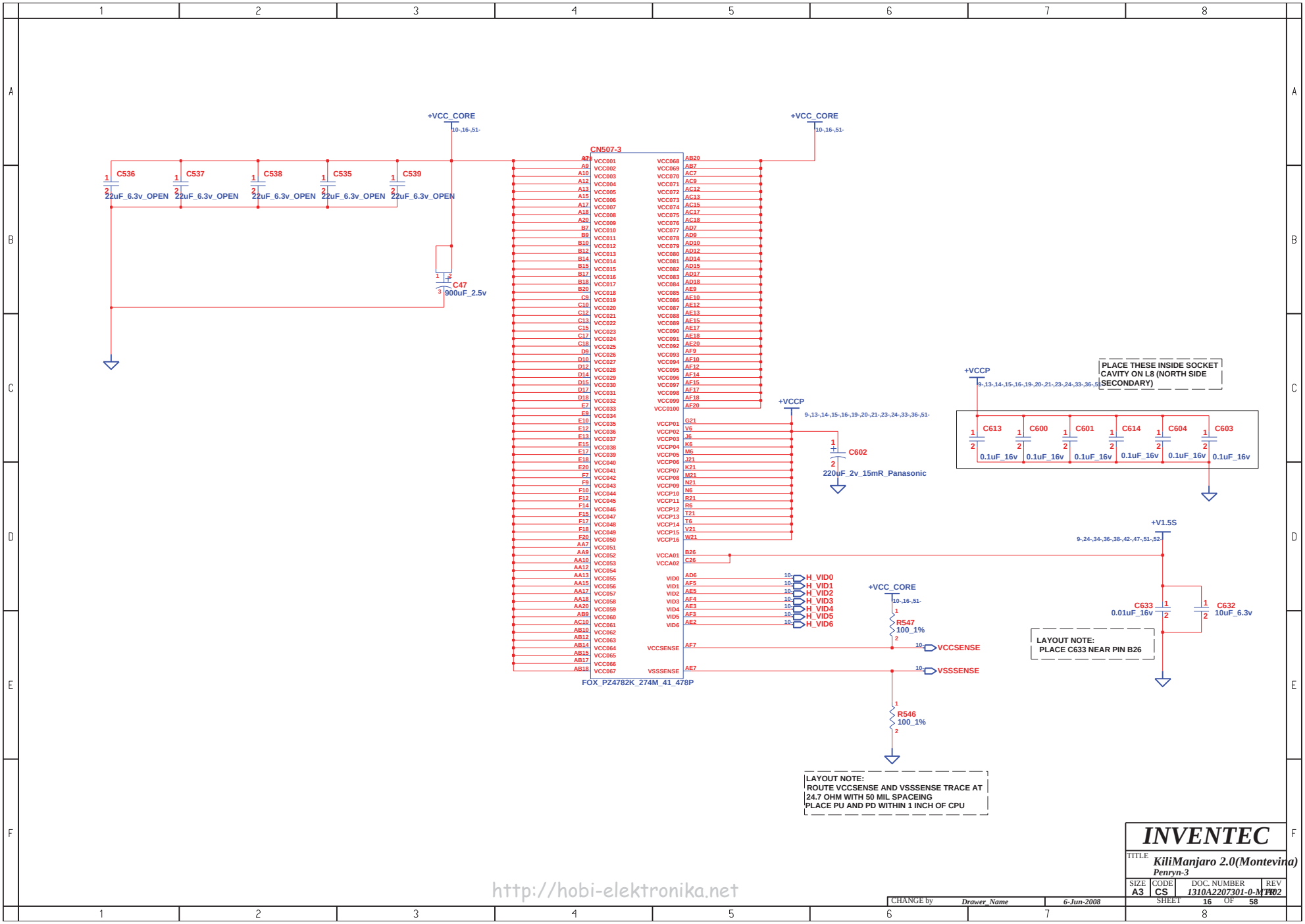

http://hobi-elektronika.net

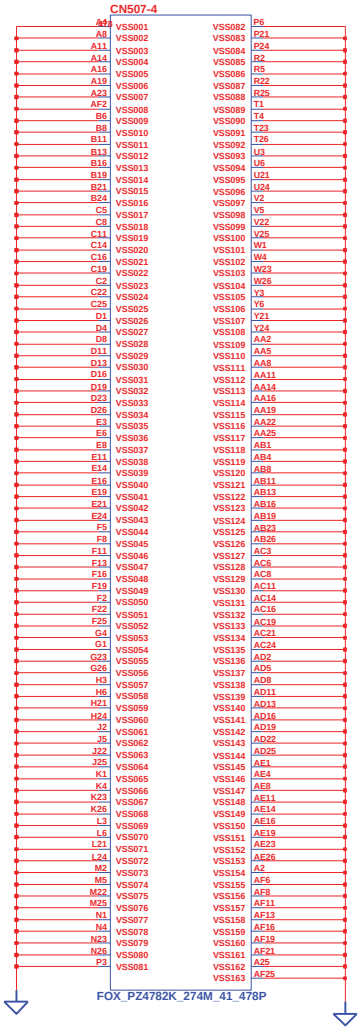

http://hobi-elektronika.net

CHANGE by	Drawer_Name	6-Jun-2008	

INVENTEC

TITLE *KiliManjaro 2.0(Montevina)*
Penryn-4

SIZE	CODE	DOC. NUMBER	REV
A3	CS	1310A2207301-0-M1-02	1.02

SHEET 17 OF 58

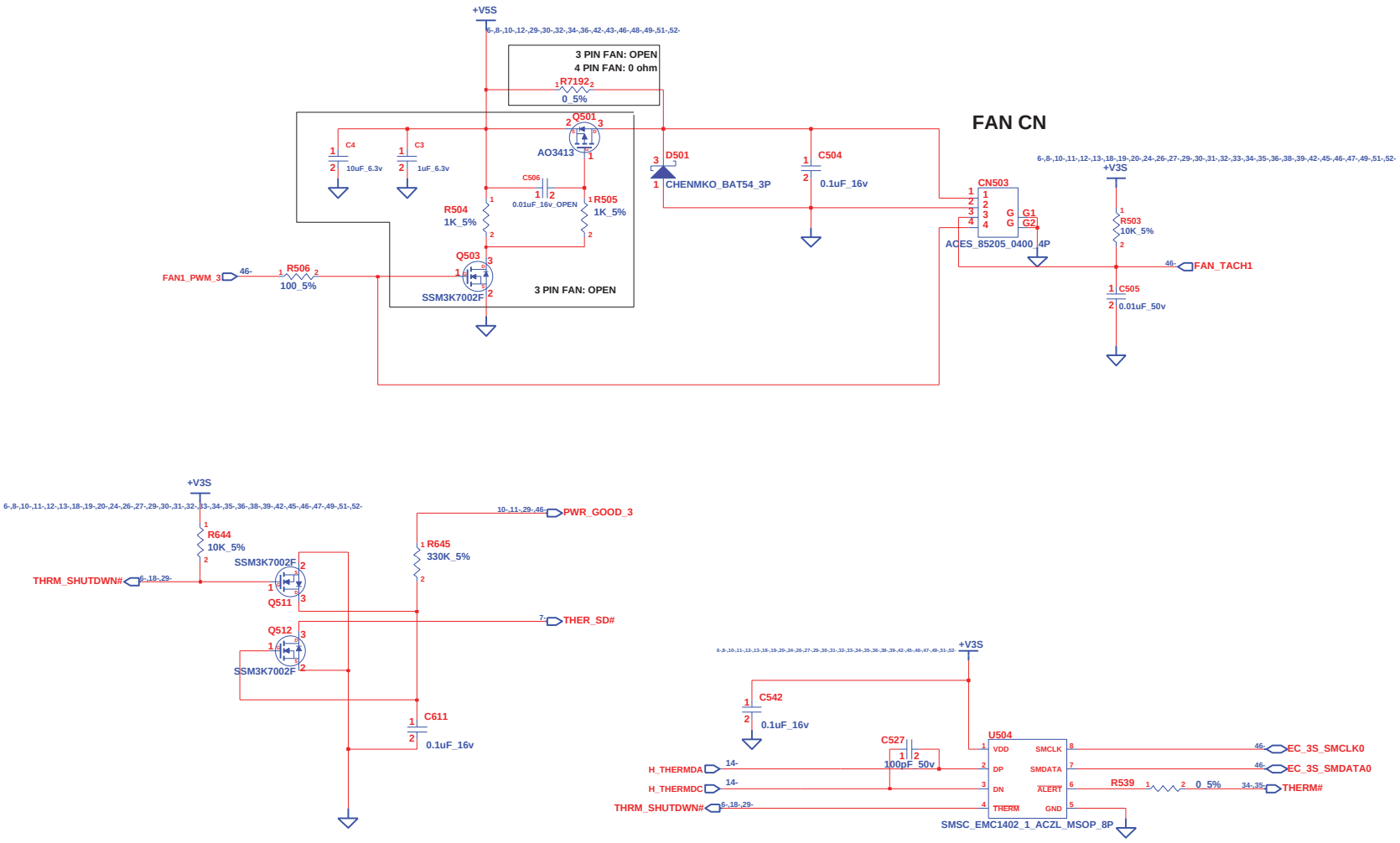

Thermal Sensor For CPU

http://hobi-elektronika.net

CHANGE by	Drawer_Name	6-Jun-2008	

INVENTEC

TITLE *KiliManjaro 2.0(Montevina)*
THERMAL&FAN CONTROLLER

SIZE	CODE	DOC. NUMBER	REV
A3	CS	1310A2207301-0-M1-02	1.0

SHEET 18 OF 58

MCH_CFG(5)	LOW=DMIx2 HIGH=DMIx4

MCH_CFG(7) (CPU Strap)	LOW=RSVD HIGH=Mobile CPU

MCH_CFG(9) PCIE Graphics Lane	LOW=Reverse Lane HIGH=Normal operation

MCH_CFG(11) PSB 4X CLK ENABLE	LOW=CALISTOGA HIGH=RESERVED

MCH_CFG(13:12) XOR/ALLZ	00=PARTIAL CLOCK GATING DISABLE 01=XOR MODE ENABLE 10=ALL-Z MODE ENABLE 11=NORMAL OPERATION

MCH_CFG(16) (FSB Dynamic ODT)	LOW=Dynamic ODT Disable HIGH=Dynamic ODT Enable

NOTE : THE RECOMMENDED
PULL-UP RESISTOR VALUE IS 4.02K OHM
PULL-DOWN RESISTOR VALUE IS 2.21K OHM

NOTE: CFG[2:0] STRP : 010b : 800 MT/S
011b : 667 MT/S
000b : 1066 MT/S

MCH_CFG(6) (ITPM Host Interface)	LOW=ITPM Host Interface Enable HIGH=ITPM Host Interface Disable

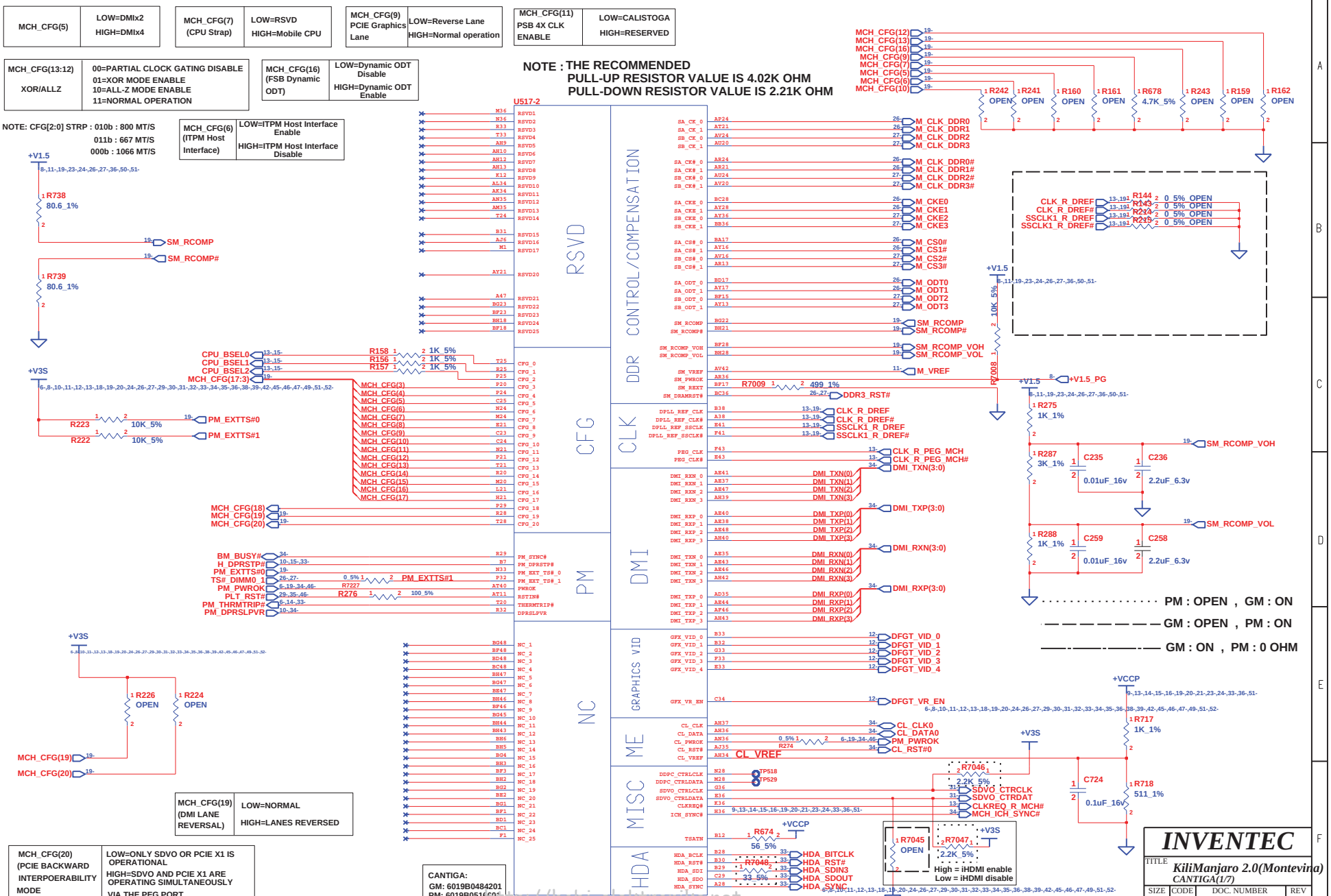

MCH_CFG(19) (DMI LANE REVERSAL)	LOW=NORMAL HIGH=LANES REVERSED

MCH_CFG(20) (PCIE BACKWARD INTERPOERABILITY MODE	LOW=ONLY SDVO OR PCIE X1 IS OPERATIONAL HIGH=SDVO AND PCIE X1 ARE OPERATING SIMULTANEOUSLY VIA THE PEG PORT

CANTIGA:
GM: 6019B0484201
PM: 6019B0516001

http://hobiedatthework.net

INVENTEC

TITLE: KiliManjaro 2.0(Montevina)
CANTIGA(1/7)

SIZE	CODE	DOC. NUMBER	REV
A3	CS	1310A2207301-0-MT02	1.02

CHANGE by Drawer_Name 6-Jun-2008 SHEET 19 OF 58

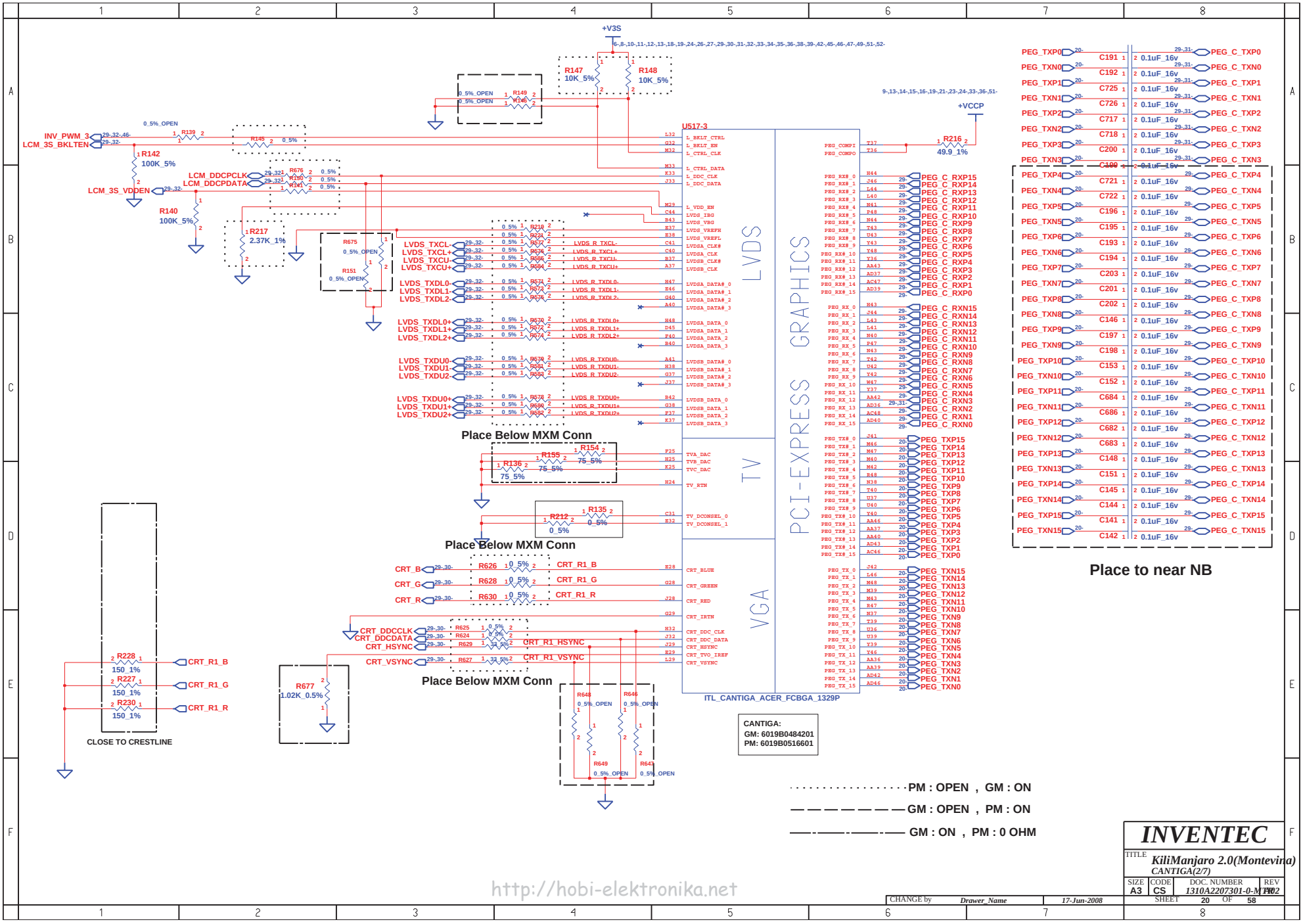

http://hobi-elektronika.net

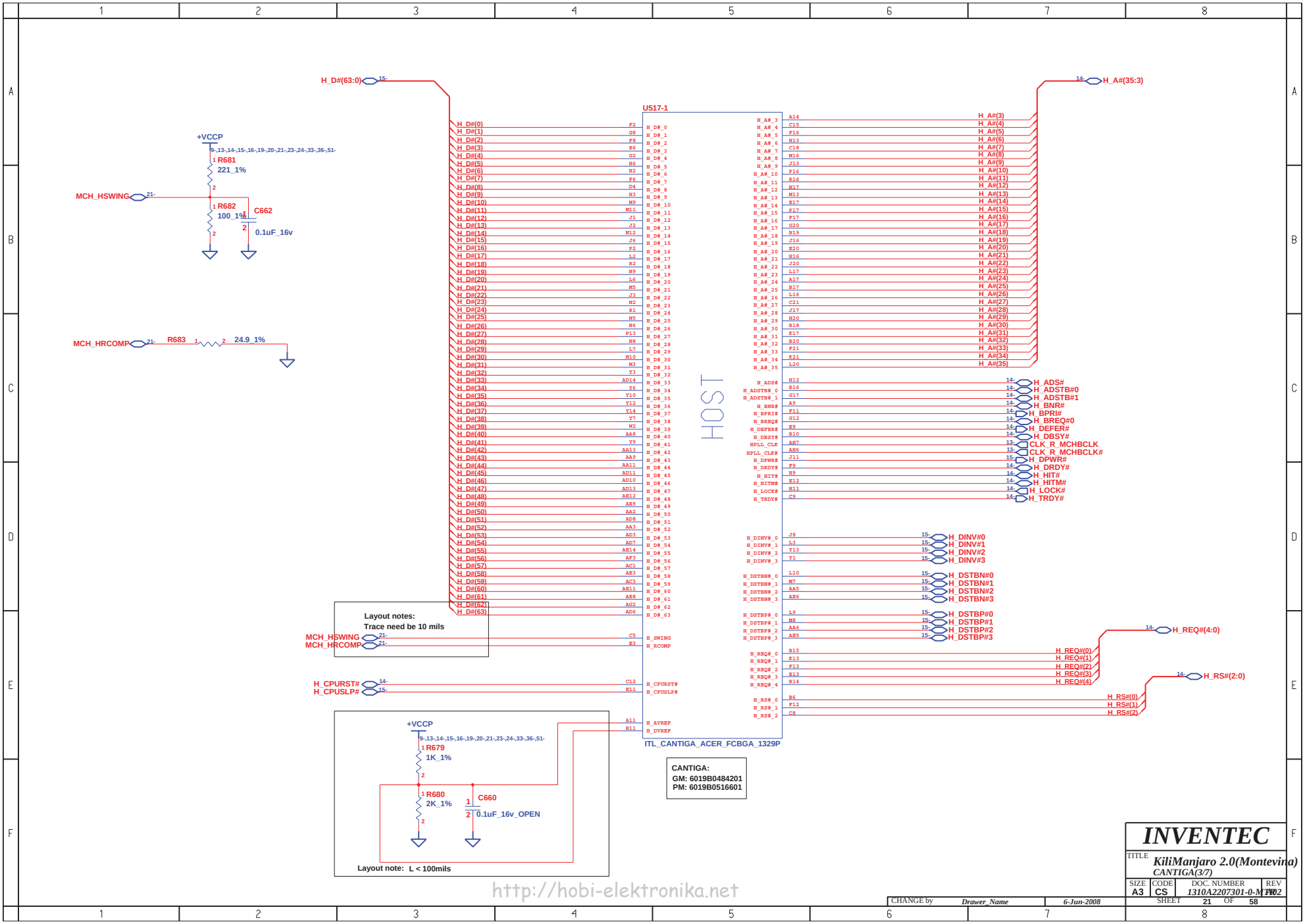

http://hobi-elektronika.net

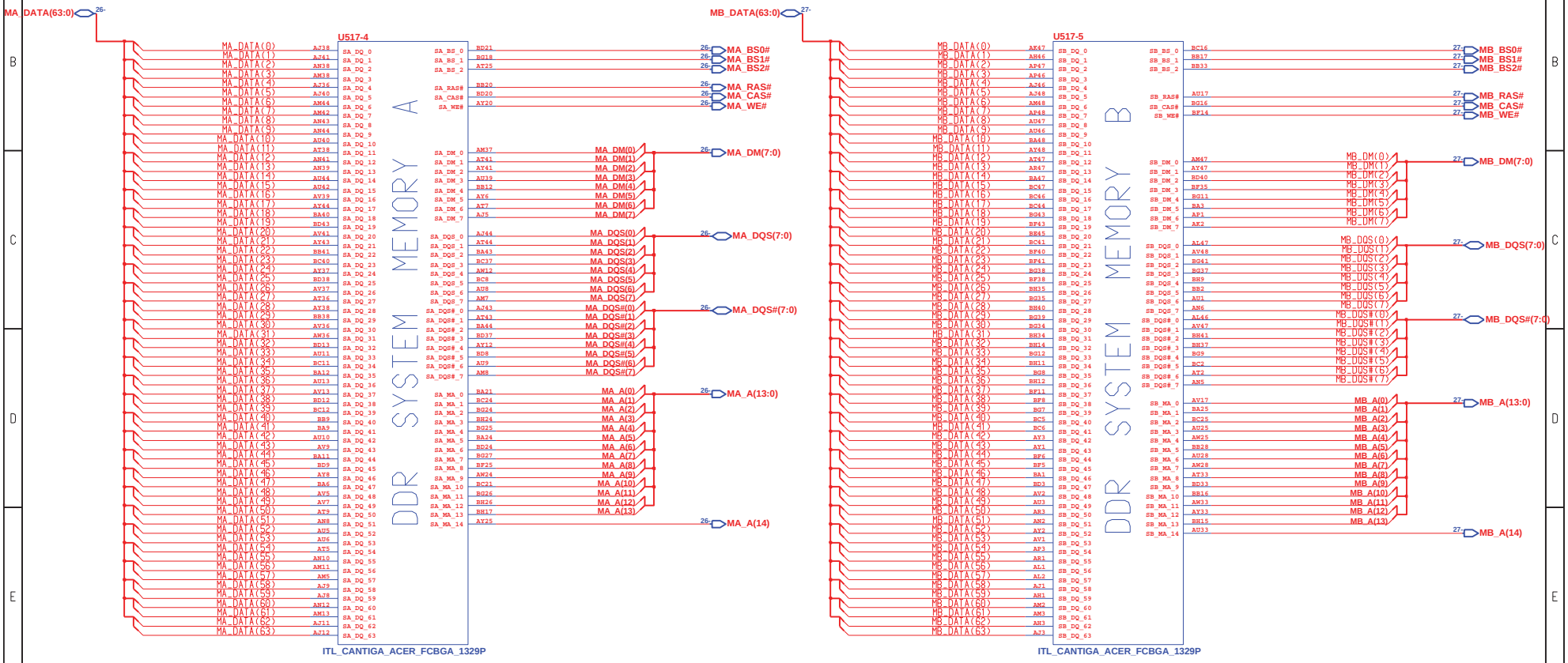

CANTIGA:
GM: 6019B0484201
PM: 6019B0516601

CANTIGA:
GM: 6019B0484201
PM: 6019B0516601

http://hobi-elektronika.net

INVENTEC			
TITLE	KiliManjaro 2.0(Montevina) CANTIGA(4/7)		
SIZE A3	CODE CS	DOC. NUMBER 1310A2207301-0-M1-02	REV
CHANGE by Drawer_Name	6-Jun-2008	SHEET 22 OF 58	

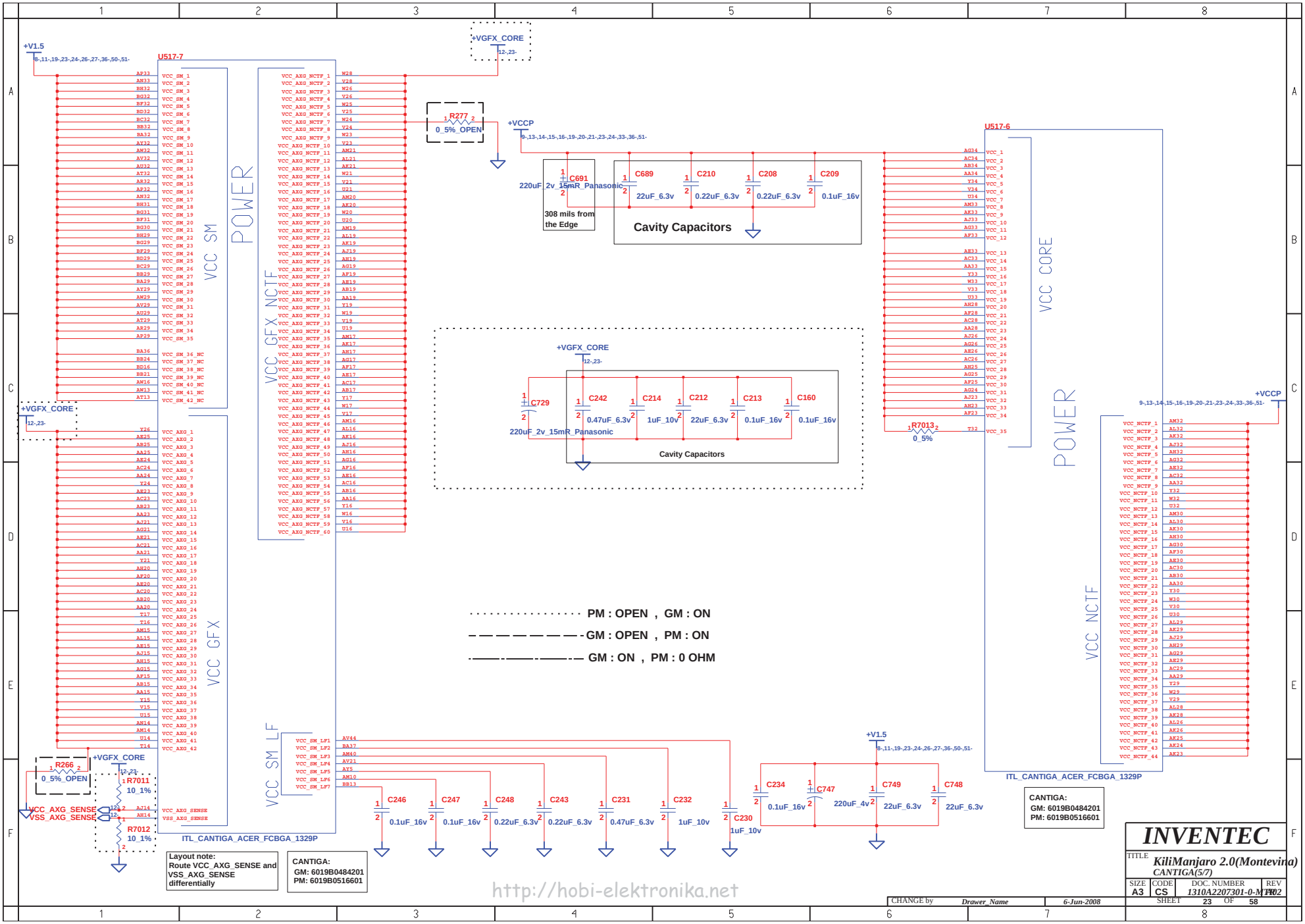

http://hobi-elektronika.net

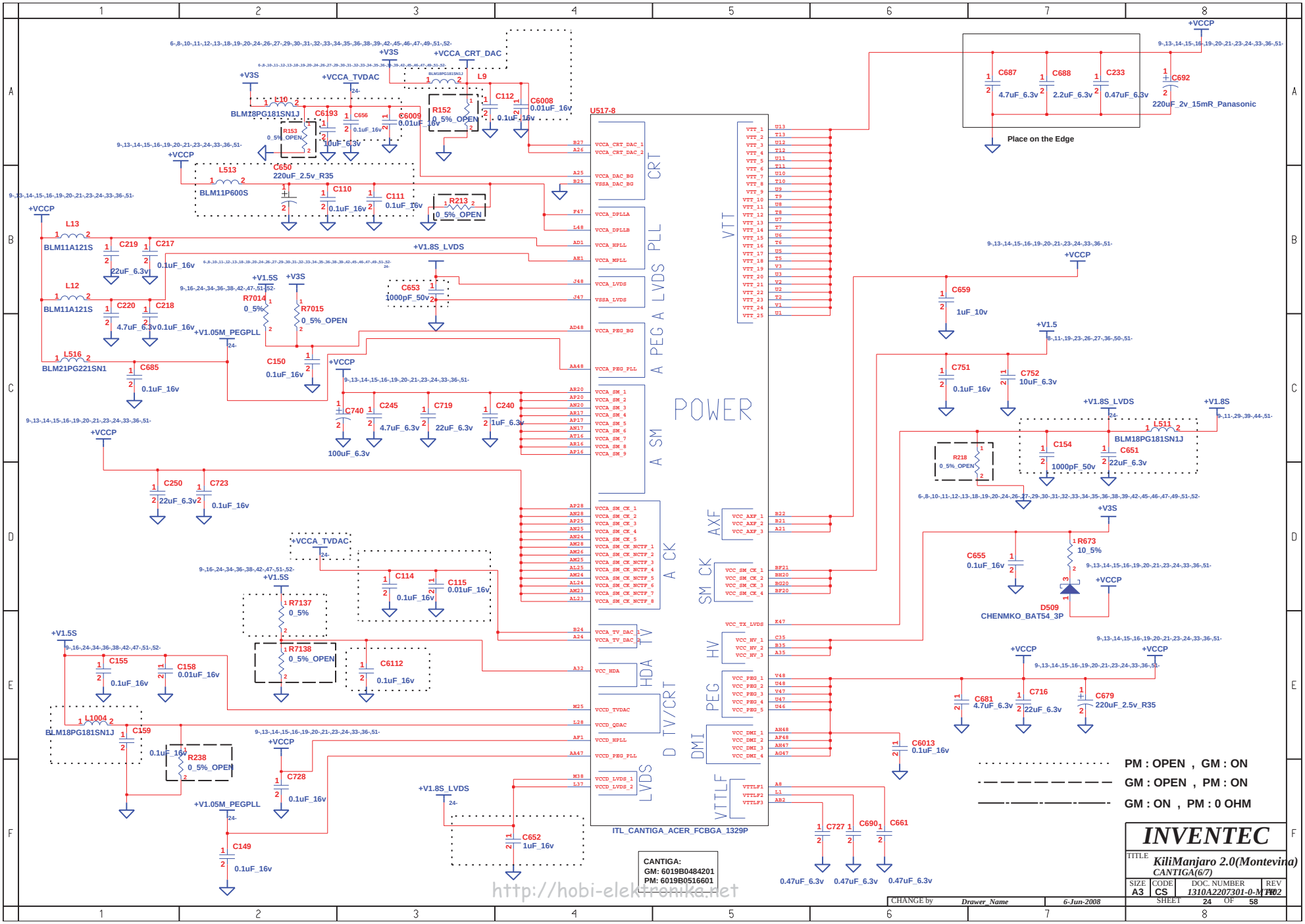
U517-8
POWER
VTT
CRT
A LVDS PLL
A PEG
A SM
A CK
AXF
SM CK
HV
PEG
DMI
VTTLF
D TV/CRT
LVDS
HDA
+V
ITL_CANTIGA_ACER_FCBGA_1329P
Place on the Edge
PM : OPEN , GM : ON
GM : OPEN , PM : ON
GM : ON , PM : 0 OHM
CANTIGA:
GM: 6019B0484201
PM: 6019B0516601
INVENTEC
KiliManjaro 2.0(Montevina)
CANTIGA(6/7)
SIZE A3
CODE CS
DOC. NUMBER 1310A2207301-0-M1402
REV
SHEET 24 OF 58
CHANGE by Drawer_Name
6-Jun-2008
http://hobi-elektronika.net

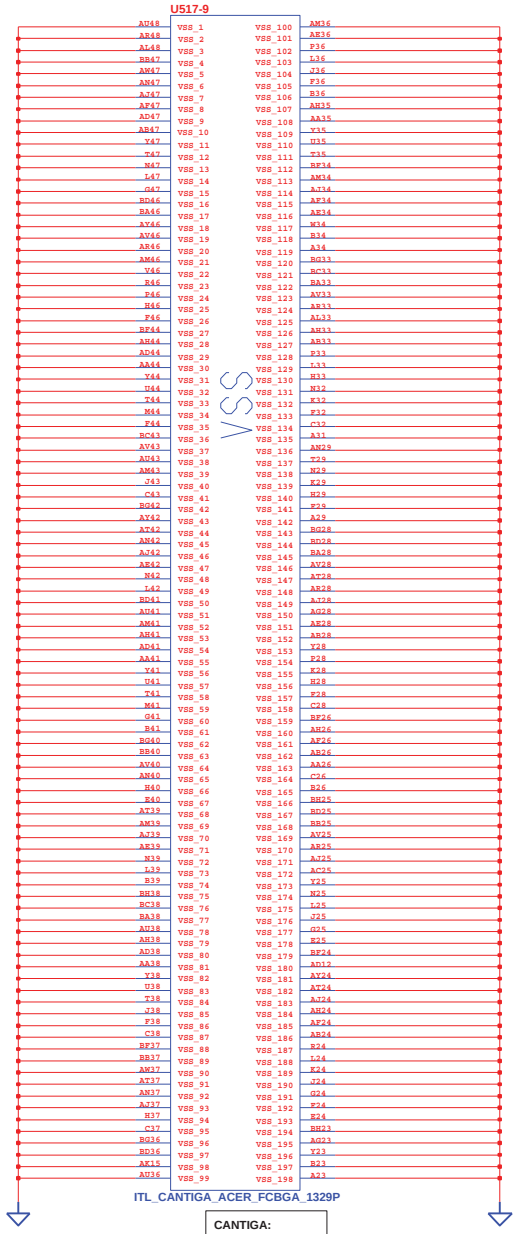

CANTIGA:
GM: 6019B0484201
PM: 6019B0516601

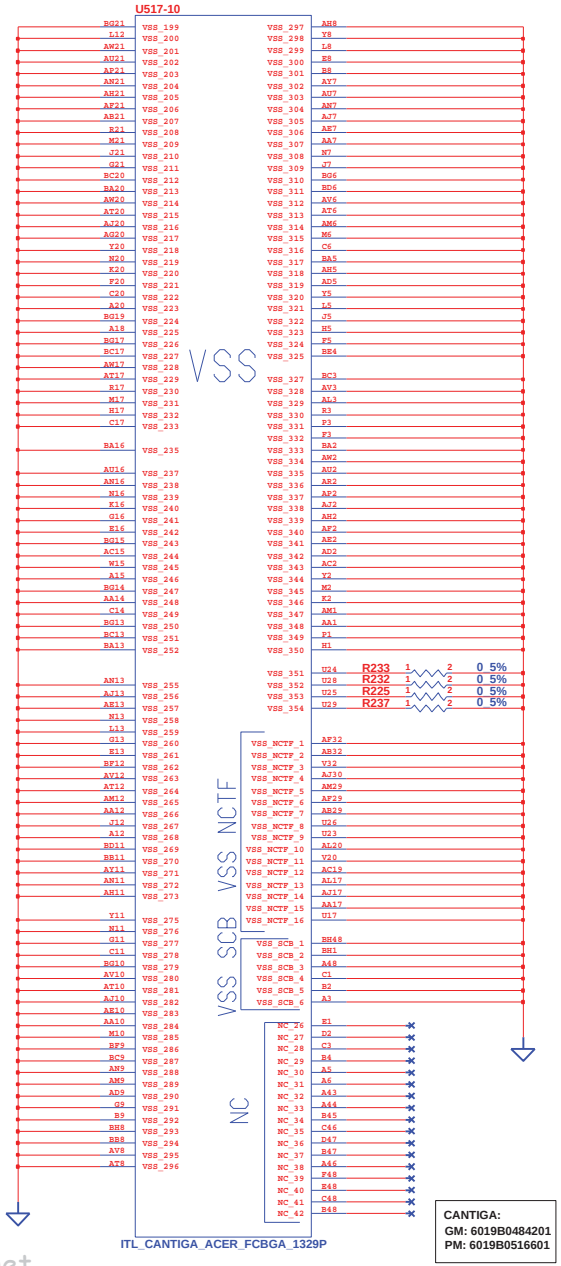

CANTIGA:
GM: 6019B0484201
PM: 6019B0516601

http://hobi-elektronika.net

INVENTEC

TITLE: KiliManjaro 2.0(Montevina)
CANTIGA(7/7)

SIZE	CODE	DOC. NUMBER	REV
A3	CS	1310A2207301-0-M102	1.0

SHEET 25 OF 58

CHANGE by Drawer_Name 6-Jun-2008

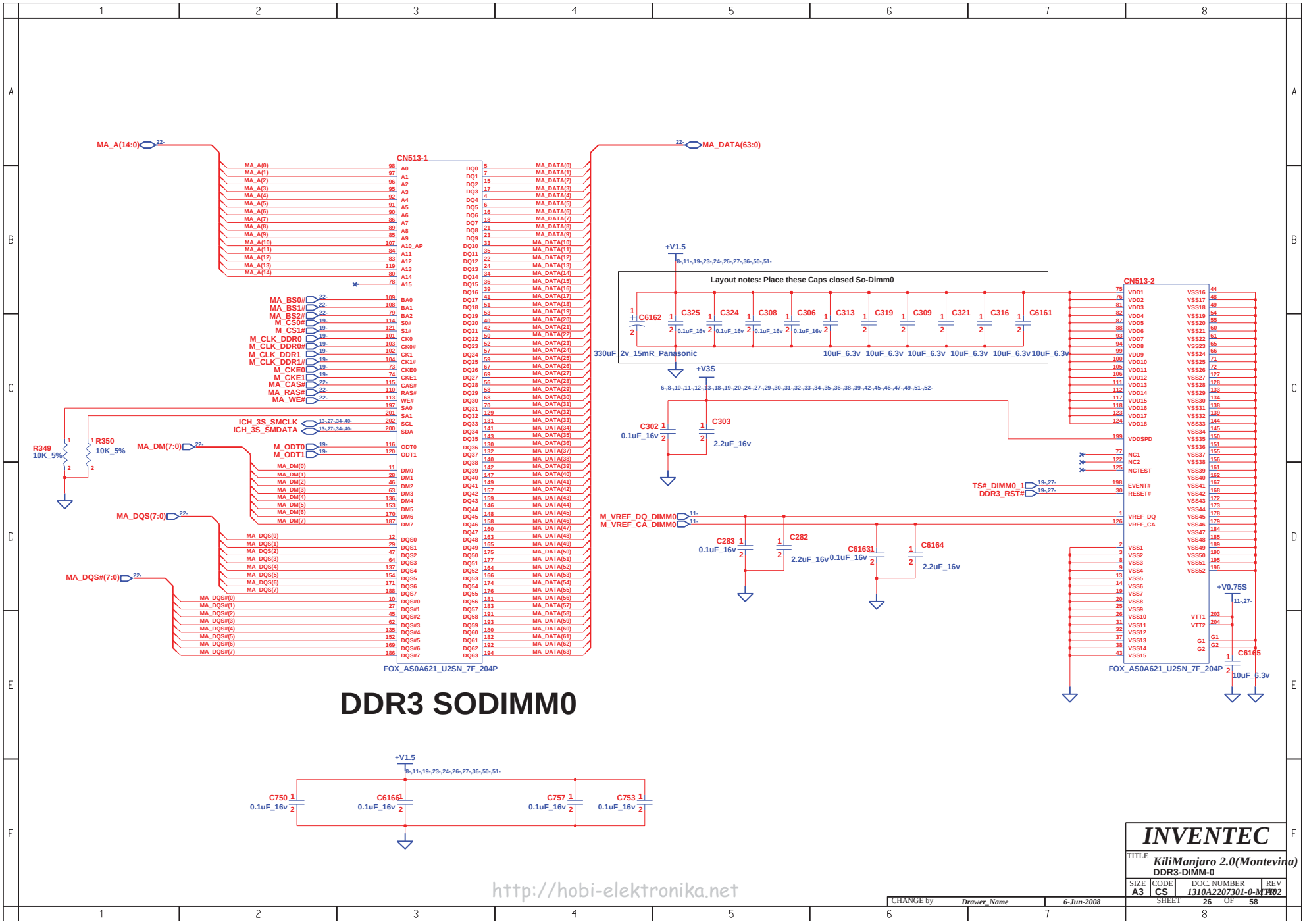

DDR3 SODIMM0

http://hobi-elektronika.net

CHANGE by	Drawer_Name	6-Jun-2008	

INVENTEC

TITLE: *KiliManjaro 2.0(Montevina)*
DDR3-DIMM-0

SIZE	CODE	DOC. NUMBER	REV
A3	CS	1310A2207301-0-MT02	0.02

SHEET 26 OF 58

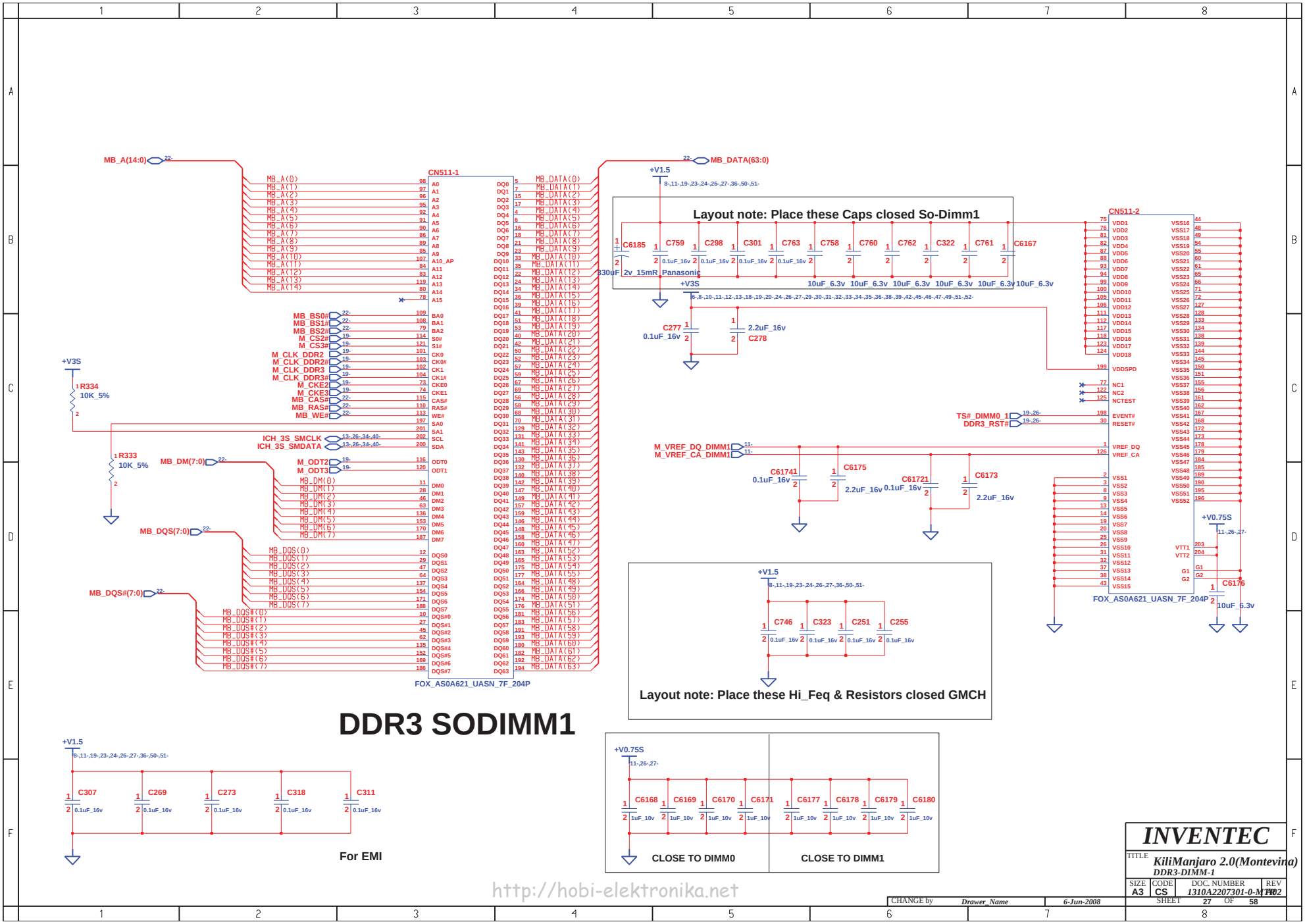
MB_A(14:0)
MB_DATA(63:0)
CN511-1
CN511-2
FOX_AS0A621_UASN_7F_204P
+V1.5
+V3S
+V0.75S
Layout note: Place these Caps closed So-Dimm1
C6185
330uF 2v 15mR Panasonic
C759
C298
C301
C763
C758
C760
C762
C322
C761
C6167
0.1uF_16v
10uF_6.3v
C277
C278
2.2uF_16v
R334
10K_5%
R333
10K_5%
MB_DM(7:0)
MB_DQS(7:0)
MB_DQS#(7:0)
MB_BS0#
MB_BS1#
MB_BS2#
M_CS2#
M_CS3#
M_CLK_DDR2
M_CLK_DDR2#
M_CLK_DDR3
M_CLK_DDR3#
M_CKE2
M_CKE3
MB_CAS#
MB_RAS#
MB_WE#
ICH_3S_SMCLK
ICH_3S_SMDATA
M_ODT2
M_ODT3
TS#_DIMM0_1
DDR3_RST#
M_VREF_DQ_DIMM1
M_VREF_CA_DIMM1
C61741
C6175
C61721
C6173
C6176
Layout note: Place these Hi_Feq & Resistors closed GMCH
C746
C323
C251
C255
DDR3 SODIMM1
C307
C269
C273
C318
C311
For EMI
C6168
C6169
C6170
C6171
C6177
C6178
C6179
C6180
1uF_10v
CLOSE TO DIMM0
CLOSE TO DIMM1
http://hobi-elektronika.net
INVENTEC
TITLE
KiliManjaro 2.0(Montevina)
DDR3-DIMM-1
SIZE A3
CODE CS
DOC. NUMBER 1310A2207301-0-M1-02
REV
SHEET 27 OF 58
CHANGE by Drawer_Name
6-Jun-2008

BLANK

http://hobi-elektronika.net

CHANGE by	Drawer_Name	6-Jun-2008	

INVENTEC

TITLE KiliManjaro 2.0(Montevina)
DDR2-DAMPING

SIZE	CODE	DOC. NUMBER	REV
A3	CS	1310A2207301-0-M1-02	1.0

SHEET 28 OF 58

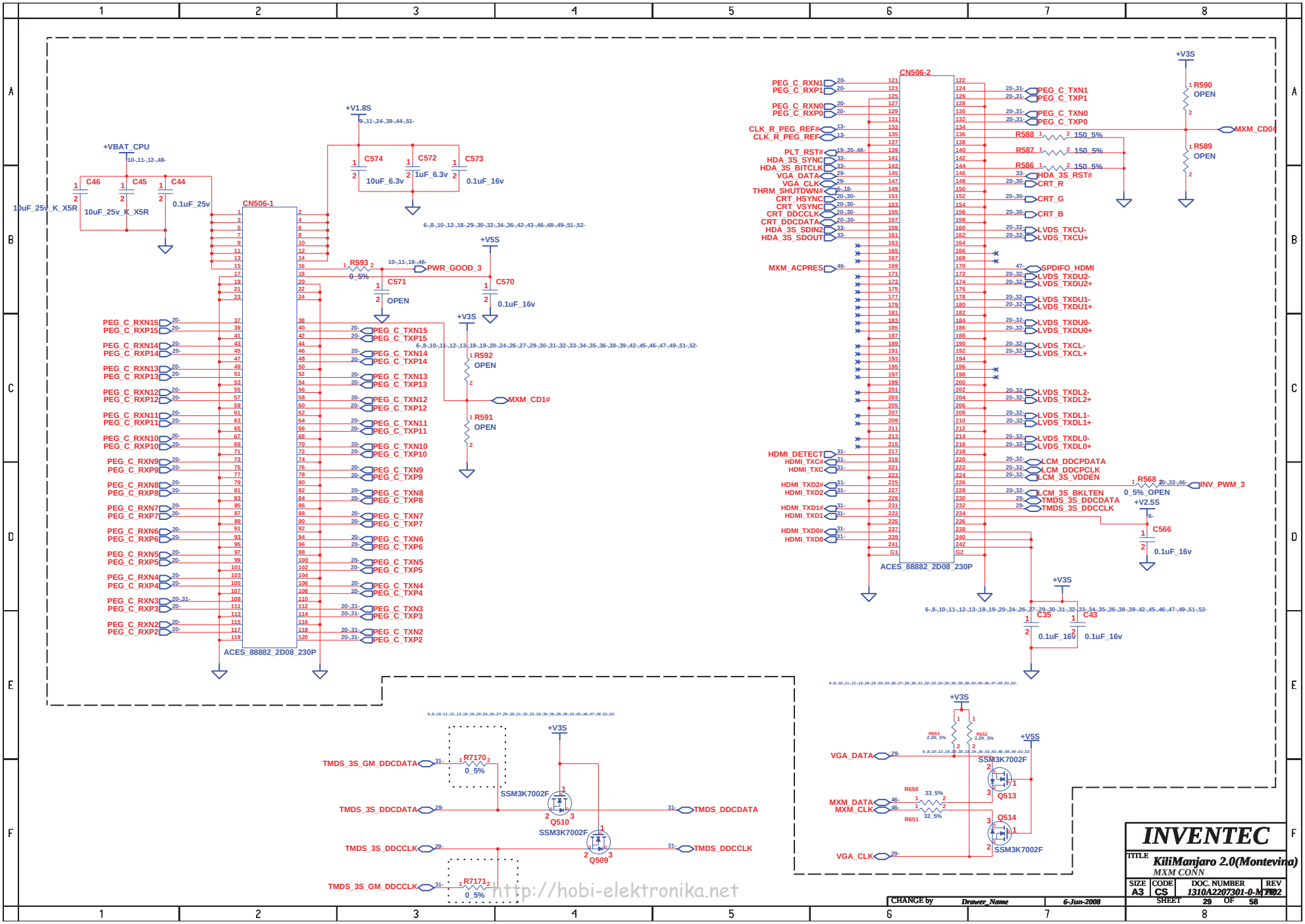

http://hobi-elektronika.net

INVENTEC

TITLE: KiliManjaro 2.0(Montevina)
MXM CONN

SIZE	CODE	DOC. NUMBER	REV
A3	CS	1310A2207301-0-M	02

SHEET 29 OF 58

CHANGE by	Drawer_Name	6-Jun-2008

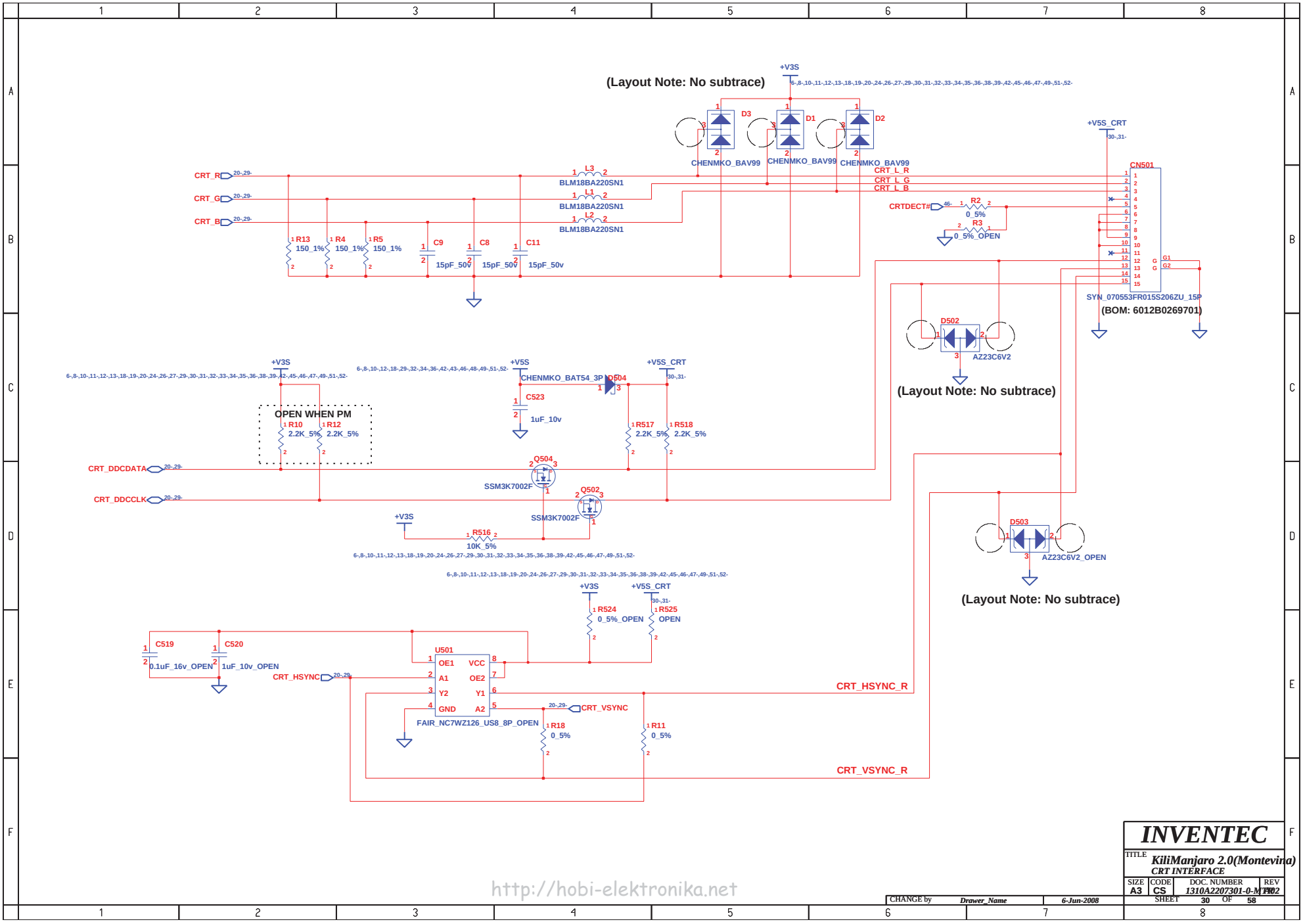
(Layout Note: No subtrace)
+V3S
D3
D1
D2
CHENMKO_BAV99
CRT_R
CRT_G
CRT_B
L3
L1
L2
BLM18BA220SN1
R13 150_1%
R4 150_1%
R5 150_1%
C9 15pF_50V
C8 15pF_50V
C11 15pF_50v
CRT_L_R
CRT_L_G
CRT_L_B
+V5S_CRT
CN501
CRTDECT#
R2 0_5%
R3 0_5%_OPEN
SYN_070553FR015S206ZU_15P
(BOM: 6012B0269701)
D502
AZ23C6V2
(Layout Note: No subtrace)
+V5S
CHENMKO_BAT54_3P
D504
C523 1uF_10v
OPEN WHEN PM
R10 2.2K_5%
R12 2.2K_5%
R517 2.2K_5%
R518 2.2K_5%
CRT_DDCDATA
CRT_DDCCLK
Q504
SSM3K7002F
Q502
SSM3K7002F
R516 10K_5%
D503
AZ23C6V2_OPEN
(Layout Note: No subtrace)
R524 0_5%_OPEN
R525 OPEN
C519 0.1uF_16v_OPEN
C520 1uF_10v_OPEN
U501
OE1
A1
Y2
GND
VCC
OE2
Y1
A2
FAIR_NC7WZ126_US8_8P_OPEN
CRT_HSYNC
CRT_VSYNC
R18 0_5%
R11 0_5%
CRT_HSYNC_R
CRT_VSYNC_R
INVENTEC
TITLE
KiliManjaro 2.0(Montevina)
CRT INTERFACE
SIZE A3
CODE CS
DOC. NUMBER 1310A2207301-0-M/B
REV 102
SHEET 30 OF 58
CHANGE by Drawer_Name
6-Jun-2008
http://hobi-elektronika.net

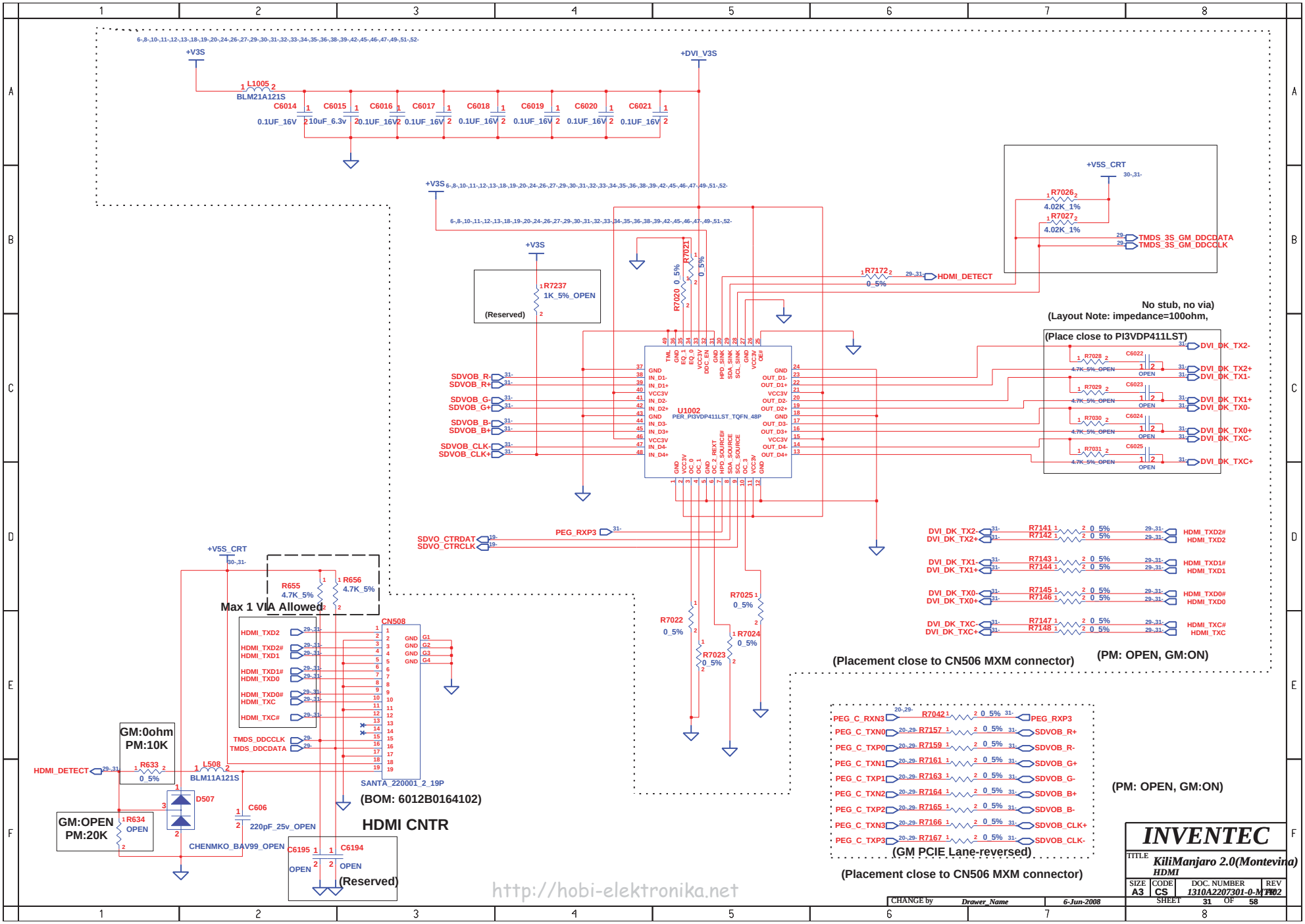
+V3S
+DVI_V3S
L1005
BLM21A121S
C6014 0.1UF_16V
C6015 10uF_6.3v
C6016 0.1UF_16V
C6017 0.1UF_16V
C6018 0.1UF_16V
C6019 0.1UF_16V
C6020 0.1UF_16V
C6021 0.1UF_16V
+V5S_CRT
R7026 4.02K_1%
R7027 4.02K_1%
TMDS_3S_GM_DDCDATA
TMDS_3S_GM_DDCCLK
R7172 0_5%
HDMI_DETECT
R7237 1K_5%_OPEN
(Reserved)
R7021 0_5%
R7020 0_5%
U1002
PER_PI3VDP411LST_TQFN_48P
SDVOB_R-
SDVOB_R+
SDVOB_G-
SDVOB_G+
SDVOB_B-
SDVOB_B+
SDVOB_CLK-
SDVOB_CLK+
No stub, no via)
(Layout Note: impedance=100ohm,
(Place close to PI3VDP411LST)
DVI_DK_TX2-
DVI_DK_TX2+
DVI_DK_TX1-
DVI_DK_TX1+
DVI_DK_TX0-
DVI_DK_TX0+
DVI_DK_TXC-
DVI_DK_TXC+
R7028 4.7K_5%_OPEN
R7029 4.7K_5%_OPEN
R7030 4.7K_5%_OPEN
R7031 4.7K_5%_OPEN
C6022 OPEN
C6023 OPEN
C6024 OPEN
C6025 OPEN
PEG_RXP3
SDVO_CTRDAT
SDVO_CTRCLK
R7025 0_5%
R7024 0_5%
R7022 0_5%
R7023 0_5%
R7141 0_5%
R7142 0_5%
R7143 0_5%
R7144 0_5%
R7145 0_5%
R7146 0_5%
R7147 0_5%
R7148 0_5%
HDMI_TXD2#
HDMI_TXD2
HDMI_TXD1#
HDMI_TXD1
HDMI_TXD0#
HDMI_TXD0
HDMI_TXC#
HDMI_TXC
(Placement close to CN506 MXM connector)
(PM: OPEN, GM:ON)
R655 4.7K_5%
R656 4.7K_5%
Max 1 VIA Allowed
CN508
SANTA_220001_2_19P
(BOM: 6012B0164102)
HDMI CNTR
GM:0ohm
PM:10K
R633 0_5%
L508 BLM11A121S
D507
C606 220pF_25v_OPEN
CHENMKO_BAV99_OPEN
GM:OPEN
PM:20K
R634 OPEN
C6195 OPEN
C6194 OPEN
(Reserved)
PEG_C_RXN3
PEG_C_TXN0
PEG_C_TXP0
PEG_C_TXN1
PEG_C_TXP1
PEG_C_TXN2
PEG_C_TXP2
PEG_C_TXN3
PEG_C_TXP3
R7042 0_5%
R7157 0_5%
R7159 0_5%
R7161 0_5%
R7163 0_5%
R7164 0_5%
R7165 0_5%
R7166 0_5%
R7167 0_5%
PEG_RXP3
SDVOB_R+
SDVOB_R-
SDVOB_G+
SDVOB_G-
SDVOB_B+
SDVOB_B-
SDVOB_CLK+
SDVOB_CLK-
(GM PCIE Lane-reversed)
(Placement close to CN506 MXM connector)
(PM: OPEN, GM:ON)
INVENTEC
TITLE KiliManjaro 2.0(Montevina)
HDMI
SIZE A3
CODE CS
DOC. NUMBER 1310A2207301-0-M/B
REV 02
SHEET 31 OF 58
CHANGE by Drawer_Name
6-Jun-2008
http://hobi-elektronika.net

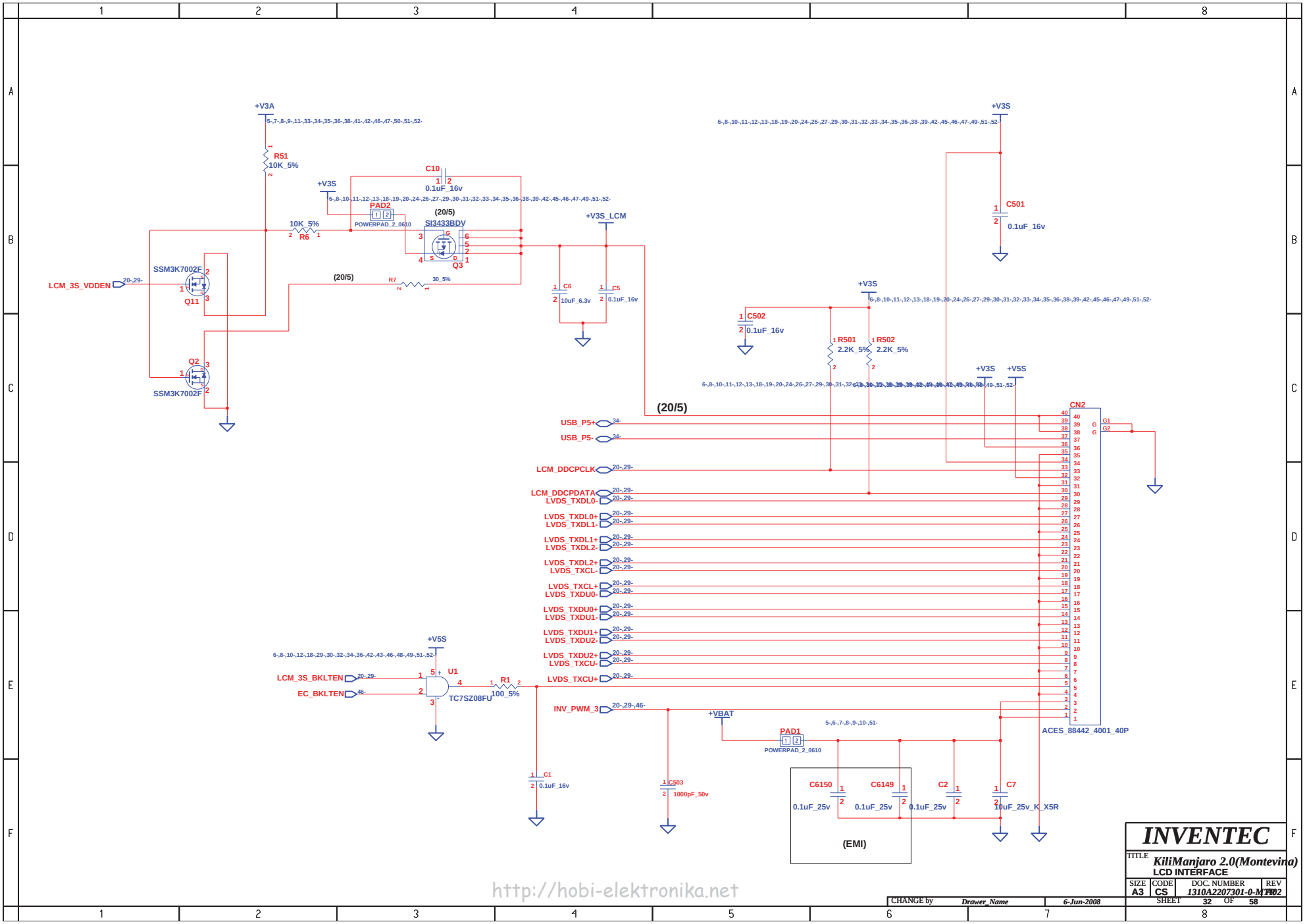

http://hobi-elektronika.net

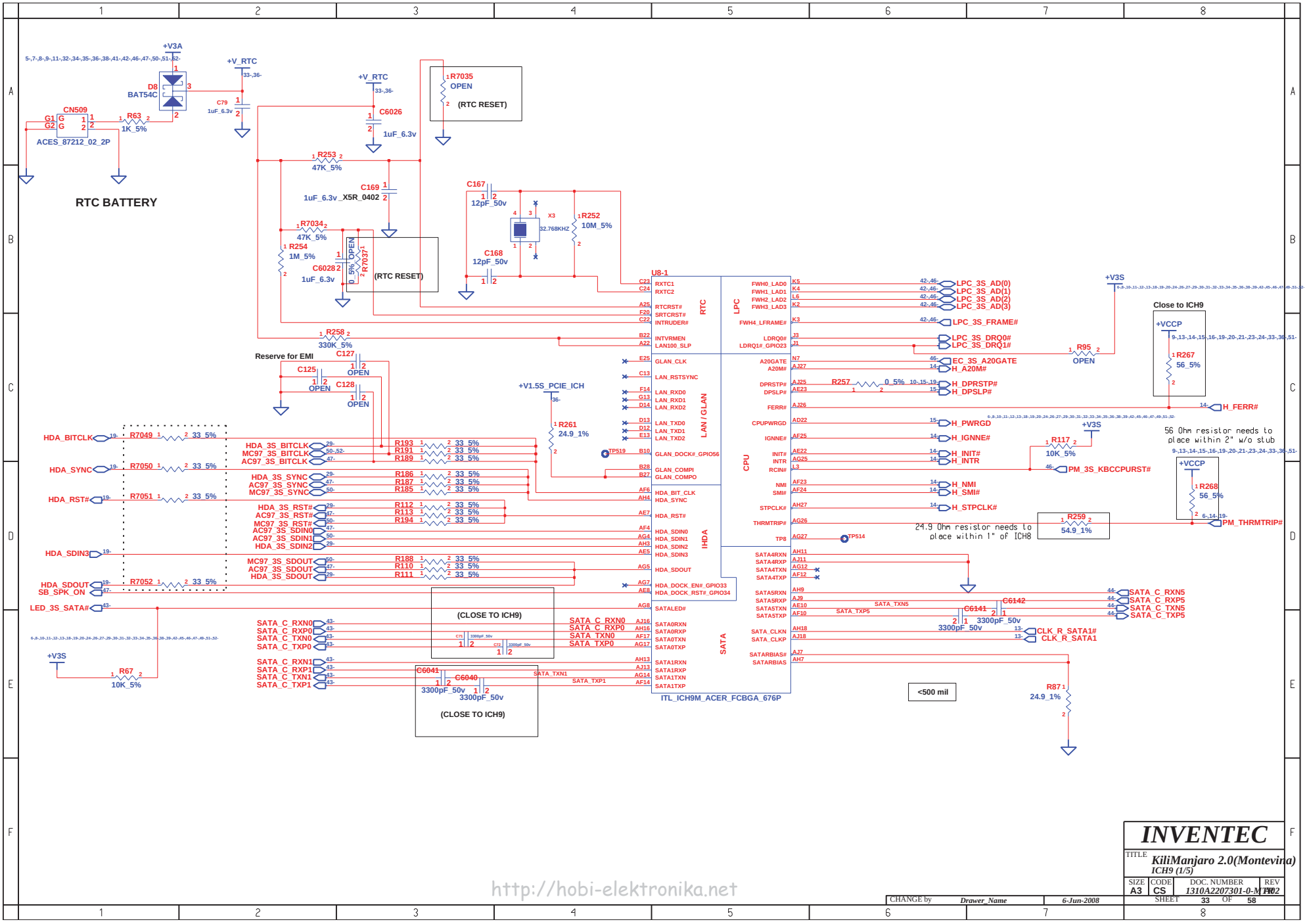

http://hobi-elektronika.net

INVENTEC			
TITLE	KiliManjaro 2.0(Montevina) ICH9 (1/5)		
SIZE A3	CODE CS	DOC. NUMBER 1310A2207301-0-M1-02	REV
CHANGE by Drawer_Name	6-Jun-2008	SHEET 33 OF 58	

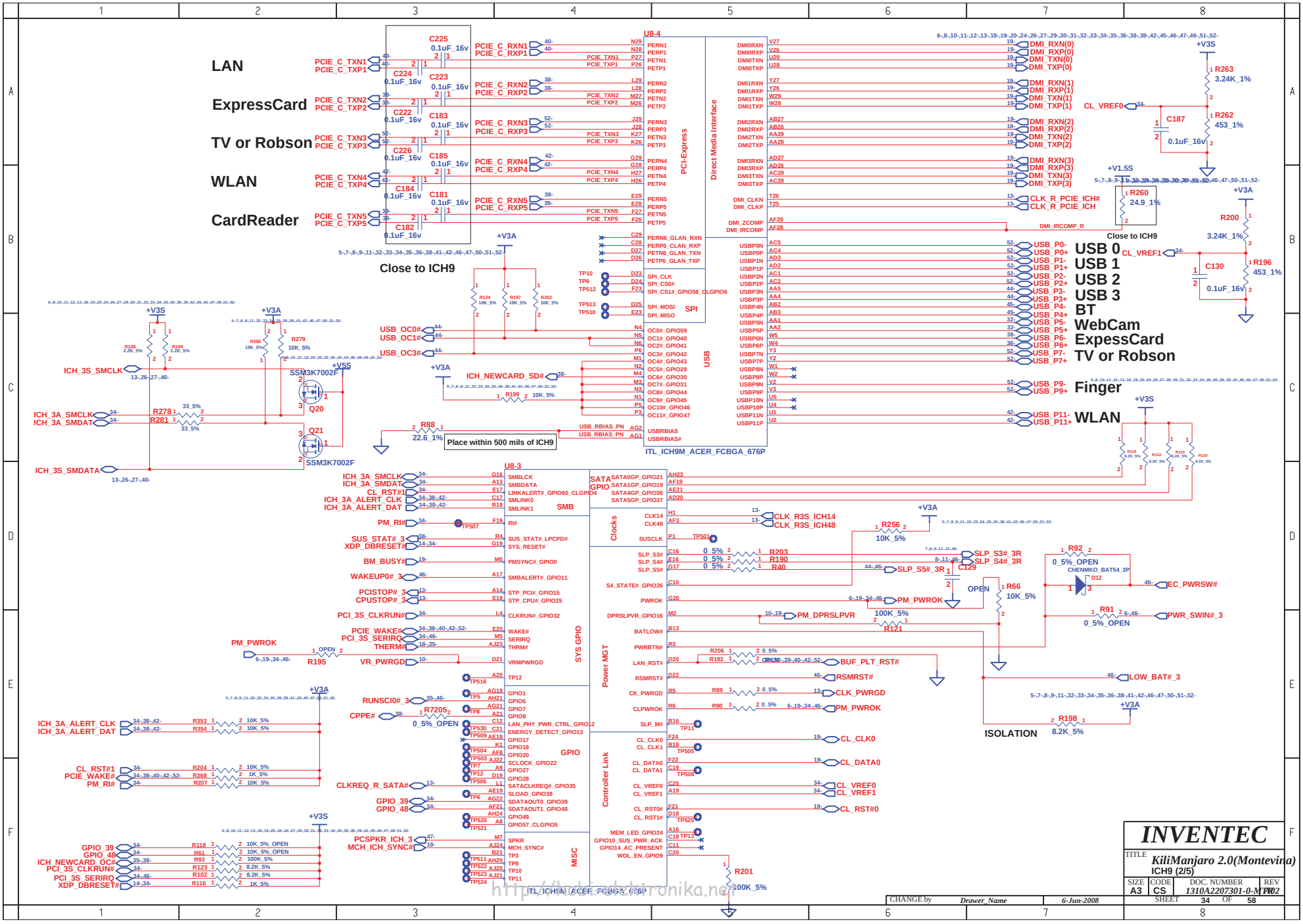
LAN
ExpressCard
TV or Robson
WLAN
CardReader
Close to ICH9
U8-4
PCI-Express
Direct Media Interface
USB
SPI
ITL_ICH9M_ACER_FCBGA_676P
USB 0
USB 1
USB 2
USB 3
BT
WebCam
ExpessCard
TV or Robson
Finger
WLAN
Place within 500 mils of ICH9
U8-3
SMB
SYS GPIO
Power MGT
Clocks
GPIO
Controller Link
MISC
ISOLATION
INVENTEC
KiliManjaro 2.0(Montevina)
ICH9 (2/5)
SIZE A3
CODE CS
DOC. NUMBER 1310A2207301-0-M102
REV
SHEET 34 OF 58
CHANGE by Drawer_Name
6-Jun-2008

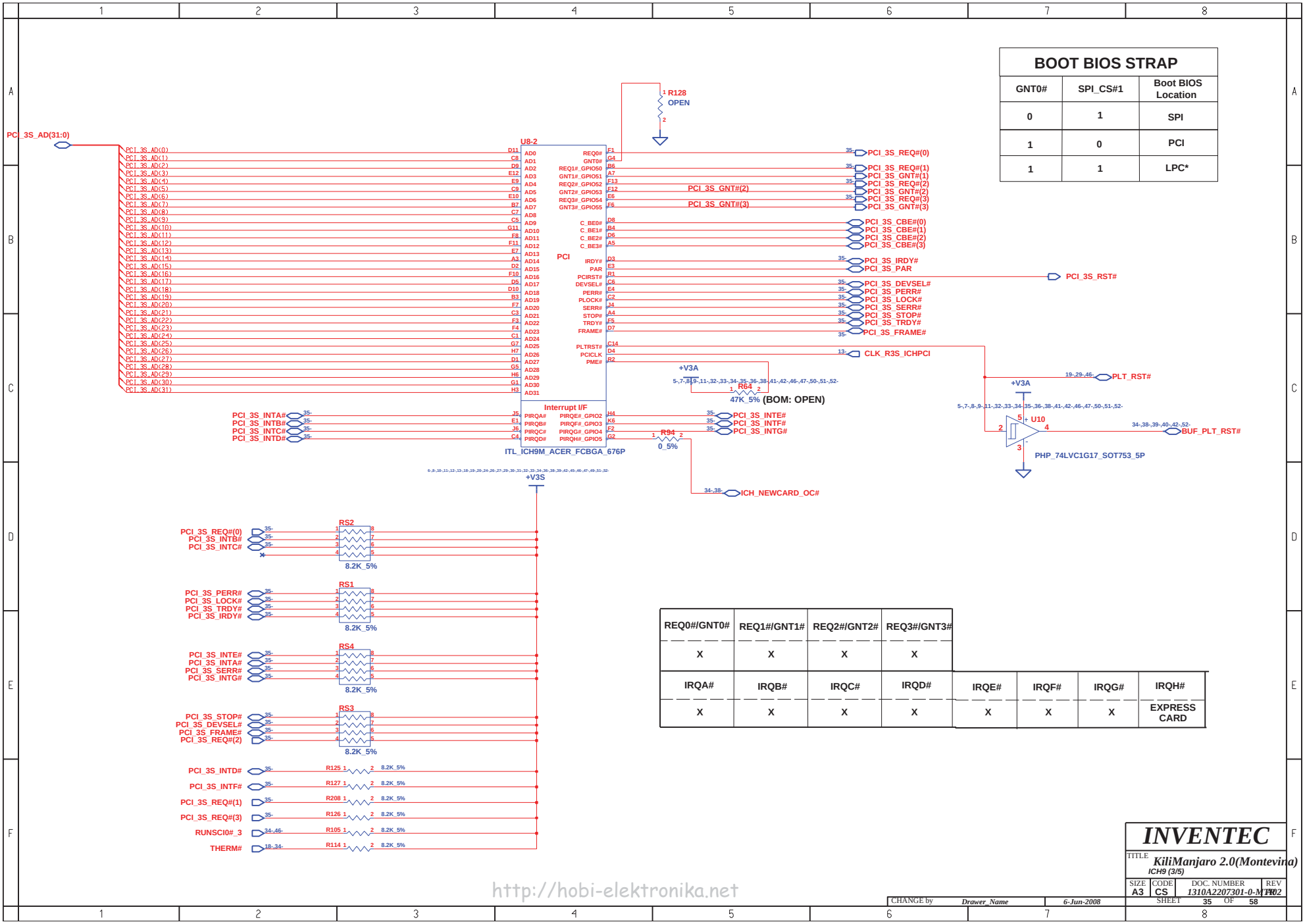

BOOT BIOS STRAP

GNT0#	SPI_CS#1	Boot BIOS Location
0	1	SPI
1	0	PCI
1	1	LPC*

REQ0#/GNT0#	REQ1#/GNT1#	REQ2#/GNT2#	REQ3#/GNT3#
X	X	X	X

IRQA#	IRQB#	IRQC#	IRQD#	IRQE#	IRQF#	IRQG#	IRQH#
X	X	X	X	X	X	X	EXPRESS CARD

INVENTEC

TITLE: KiliManjaro 2.0(Montevina)
ICH9 (3/5)

SIZE	CODE	DOC. NUMBER	REV
A3	CS	1310A2207301-0-MT02	1.0

CHANGE by: Drawer_Name 6-Jun-2008

SHEET 35 OF 58

http://hobi-elektronika.net

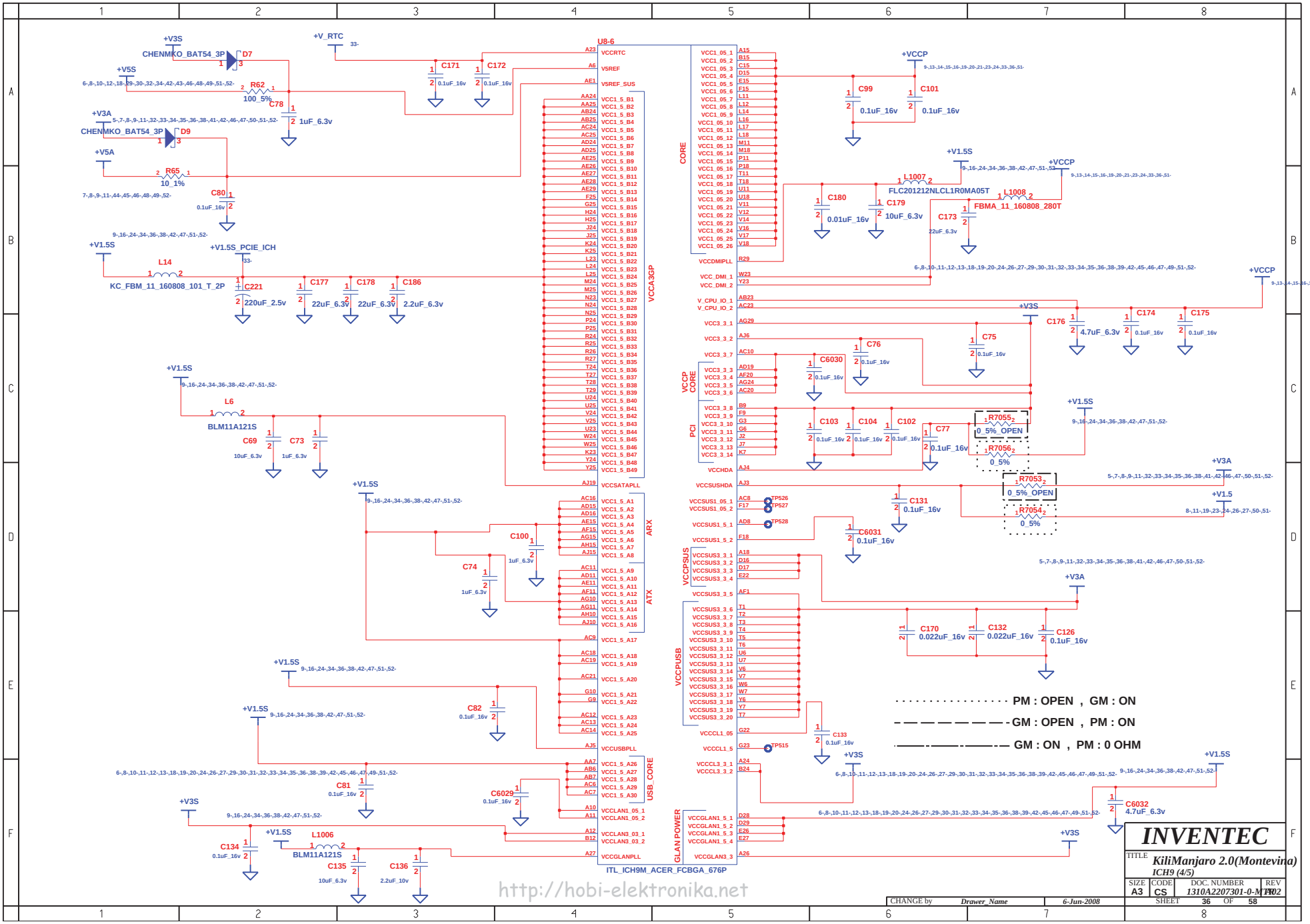
U8-6
ITL_ICH9M_ACER_FCBGA_676P
CORE
VCCA3GP
VCCP CORE
PCI
ARX
ATX
VCCPSUS
VCCPUSB
USB_CORE
GLAN POWER
+V3S
CHENMKO_BAT54_3P
D7
+V5S
R62
100_5%
C78
1uF_6.3v
+V3A
D9
+V5A
R65
10_1%
C80
0.1uF_16v
+V1.5S
+V1.5S_PCIE_ICH
L14
KC_FBM_11_160808_101_T_2P
C221
220uF_2.5v
C177
22uF_6.3v
C178
C186
2.2uF_6.3v
+V_RTC
C171
C172
L6
BLM11A121S
C69
10uF_6.3v
C73
1uF_6.3v
C100
C74
C82
C81
C6029
L1006
C134
C135
C136
2.2uF_10v
+VCCP
C99
C101
L1007
FLC201212NLCL1R0MA05T
C180
0.01uF_16v
C179
10uF_6.3v
L1008
FBMA_11_160808_280T
C173
22uF_6.3v
C76
C6030
C75
C176
4.7uF_6.3v
C174
C175
C103
C104
C102
C77
R7055
0_5%_OPEN
R7056
0_5%
R7053
R7054
C131
C6031
C170
0.022uF_16v
C132
C126
C133
C6032
4.7uF_6.3v
TP526
TP527
TP528
TP515
PM : OPEN , GM : ON
GM : OPEN , PM : ON
GM : ON , PM : 0 OHM
http://hobi-elektronika.net
INVENTEC
TITLE
KiliManjaro 2.0(Montevina)
ICH9 (4/5)
SIZE A3
CODE CS
DOC. NUMBER 1310A2207301-0-M1-02
REV
SHEET 36 OF 58
CHANGE by Drawer_Name
6-Jun-2008

U8-5

AA26	VSS001	VSS107	H5
AA27	VSS002	VSS108	J23
AA3	VSS003	VSS109	J26
AA6	VSS004	VSS110	J27
AB1	VSS005	VSS111	AC22
AA23	VSS006	VSS112	K28
AB28	VSS007	VSS113	K29
AB29	VSS008	VSS114	L13
AB4	VSS009	VSS115	L15
AB5	VSS010	VSS116	L2
AC17	VSS011	VSS117	L26
AC26	VSS012	VSS118	L27
AC27	VSS013	VSS119	L5
AC3	VSS014	VSS120	L7
AD1	VSS015	VSS121	M12
AD10	VSS016	VSS122	M13
AD12	VSS017	VSS123	M14
AD13	VSS018	VSS124	M15
AD14	VSS019	VSS125	M16
AD17	VSS020	VSS126	M17
AD18	VSS021	VSS127	M23
AD21	VSS022	VSS128	M28
AD28	VSS023	VSS129	M29
AD29	VSS024	VSS130	N11
AD4	VSS025	VSS131	N12
AD5	VSS026	VSS132	N13
AD6	VSS027	VSS133	N14
AD7	VSS028	VSS134	N15
AD9	VSS029	VSS135	N16
AE12	VSS030	VSS136	N17
AE13	VSS031	VSS137	N18
AE14	VSS032	VSS138	N26
AE16	VSS033	VSS139	N27
AE17	VSS034	VSS140	P12
AE2	VSS035	VSS141	P13
AE20	VSS036	VSS142	P14
AE24	VSS037	VSS143	P15
AE3	VSS038	VSS144	P16
AE4	VSS039	VSS145	P17
AE6	VSS040	VSS146	P2
AE9	VSS041	VSS147	P23
AF13	VSS042	VSS148	P28
AF16	VSS043	VSS149	P29
AF18	VSS044	VSS150	P4
AF22	VSS045	VSS151	P7
AH26	VSS046	VSS152	R11
AF26	VSS047	VSS153	R12
AF27	VSS048	VSS154	R13
AF5	VSS049	VSS155	R14
AF7	VSS050	VSS156	R15
AF9	VSS051	VSS157	R16
AG13	VSS052	VSS158	R17
AG16	VSS053	VSS159	R18
AG18	VSS054	VSS160	R28
AG20	VSS055	VSS161	T12
AG23	VSS056	VSS162	T13
AG3	VSS057	VSS163	T14
AG6	VSS058	VSS164	T15
AG9	VSS059	VSS165	T16
AH12	VSS060	VSS166	T17
AH14	VSS061	VSS167	T23
AH17	VSS062	VSS168	B26
AH19	VSS063	VSS169	U12
AH2	VSS064	VSS170	U13
AH22	VSS065	VSS171	U14
AH25	VSS066	VSS172	U15
AH28	VSS067	VSS173	U16
AH5	VSS068	VSS174	U17
AH8	VSS069	VSS175	AD23
AJ12	VSS070	VSS176	U26
AJ14	VSS071	VSS177	U27
AJ17	VSS072	VSS178	U3
AJ8	VSS073	VSS179	V1
B11	VSS074	VSS180	V13
B14	VSS075	VSS181	V15
B17	VSS076	VSS182	V23
B2	VSS077	VSS183	V28
B20	VSS078	VSS184	V29
B23	VSS079	VSS185	V4
B5	VSS080	VSS186	V5
B8	VSS081	VSS187	W26
C26	VSS082	VSS188	W27
C27	VSS083	VSS189	W3
E11	VSS084	VSS190	Y1
E14	VSS085	VSS191	Y28
E18	VSS086	VSS192	Y29
E2	VSS087	VSS193	Y4
E21	VSS088	VSS194	Y5
E24	VSS089	VSS195	AG28
E5	VSS090	VSS196	AH6
E8	VSS091	VSS197	AF2
F16	VSS092	VSS198	B25
F28	VSS093		
F29	VSS094	VSS_NCTF1	A1
G12	VSS095	VSS_NCTF2	A2
G14	VSS096	VSS_NCTF3	A28
G18	VSS097	VSS_NCTF4	A29
G21	VSS098	VSS_NCTF5	AH1
G24	VSS099	VSS_NCTF6	AH29
G26	VSS100	VSS_NCTF7	AJ1
G27	VSS101	VSS_NCTF8	AJ2
G8	VSS102	VSS_NCTF9	AJ28
H2	VSS103	VSS_NCTF10	AJ29
H23	VSS104	VSS_NCTF11	B1
H28	VSS105	VSS_NCTF12	B29
H29	VSS106		

ITL_ICH9M_ACER_FCBGA_676P

http://nobi-elektronika.net

CHANGE by	Drawer_Name	6-Jun-2008

INVENTEC

TITLE: KiliManjaro 2.0(Montevina)
ICH9 (5/5)

SIZE	CODE	DOC. NUMBER	REV
A3	CS	1310A2207301-0-MT02	1.02

SHEET 37 OF 58

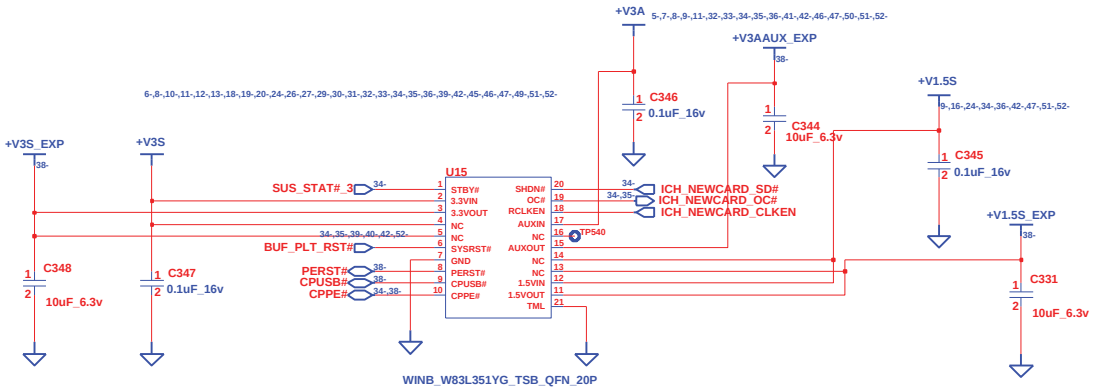

GMT 2nd source: pin 4: +V3S
pin 5: +V3S_EXP
pin 14: +V1.5S
pin 13: +V1.5S_EXP

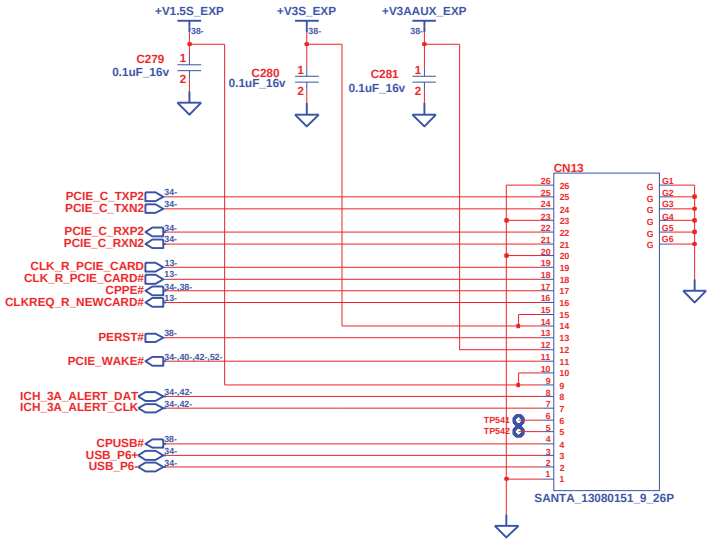

http://hobi-elektronika.net

CHANGE by	Drawer_Name	6-Jun-2008	

INVENTEC

TITLE *KiliManjaro 2.0(Montevina)*
EXPRESS CARD

SIZE	CODE	DOC. NUMBER	REV
A3	CS	1310A2207301-0-M1-02	1.0

SHEET 38 OF 58

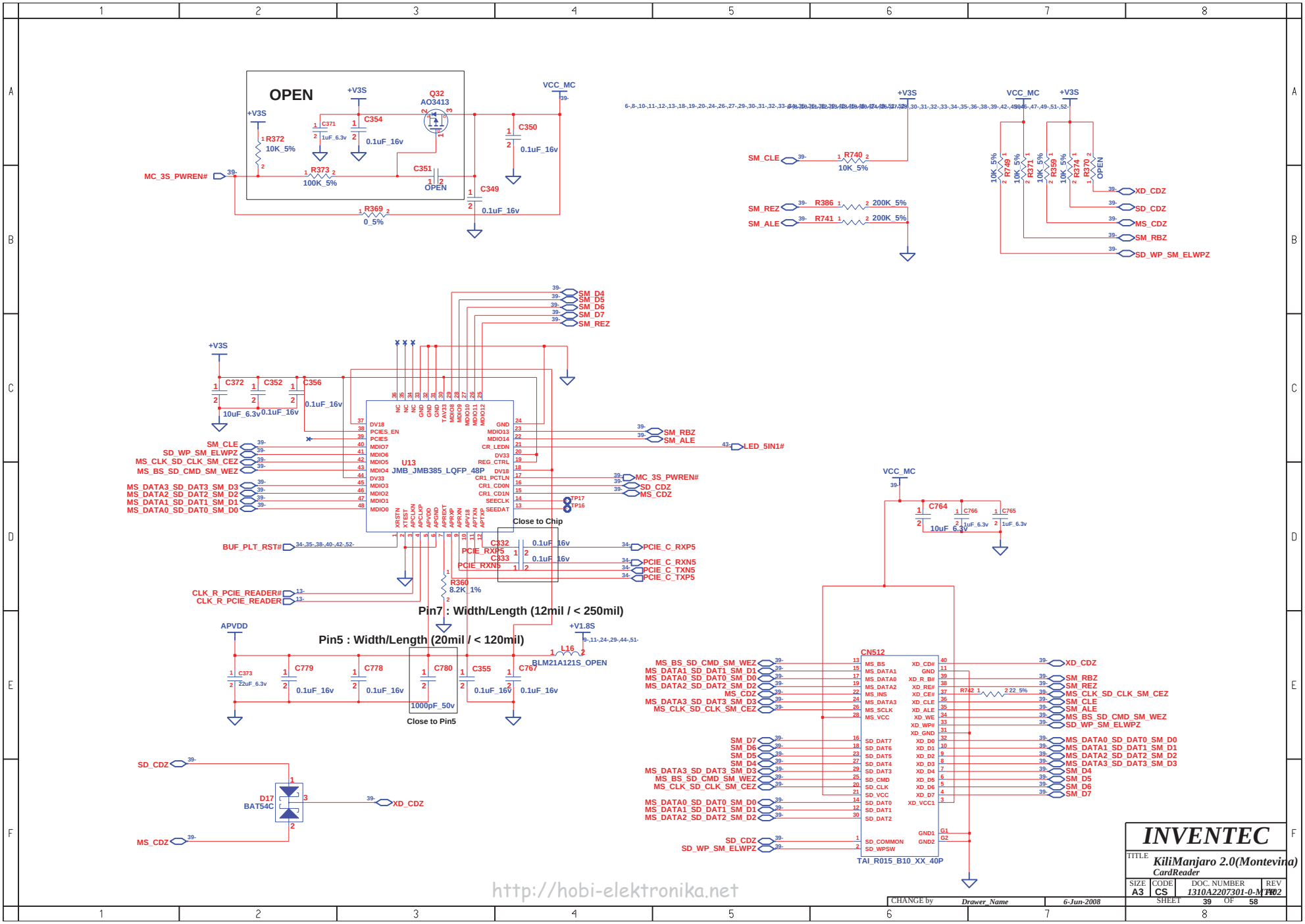
OPEN
+V3S
Q32
AO3413
VCC_MC
C371
1uF_6.3v
C354
0.1uF_16v
C350
0.1uF_16v
R372
10K_5%
MC_3S_PWREN#
R373
100K_5%
C351
OPEN
C349
0.1uF_16v
R369
0_5%
SM_CLE
R740
10K_5%
SM_REZ
R386
200K_5%
SM_ALE
R741
200K_5%
R368
R371
R369
R374
R370
OPEN
XD_CDZ
SD_CDZ
MS_CDZ
SM_RBZ
SD_WP_SM_ELWPZ
SM_D4
SM_D5
SM_D6
SM_D7
SM_REZ
C372
C352
C356
10uF_6.3v
0.1uF_16v
0.1uF_16v
U13
JMB_JMB385_LQFP_48P
SM_RBZ
SM_ALE
LED_5IN1#
SM_CLE
SD_WP_SM_ELWPZ
MS_CLK_SD_CLK_SM_CEZ
MS_BS_SD_CMD_SM_WEZ
MS_DATA3_SD_DAT3_SM_D3
MS_DATA2_SD_DAT2_SM_D2
MS_DATA1_SD_DAT1_SM_D1
MS_DATA0_SD_DAT0_SM_D0
MC_3S_PWREN#
SD_CDZ
MS_CDZ
TP17
TP16
Close to Chip
BUF_PLT_RST#
C332
C333
PCIE_RXP5
PCIE_RXN5
PCIE_C_RXP5
PCIE_C_RXN5
PCIE_C_TXN5
PCIE_C_TXP5
CLK_R_PCIE_READER#
CLK_R_PCIE_READER
R360
8.2K_1%
Pin7 : Width/Length (12mil / < 250mil)
Pin5 : Width/Length (20mil / < 120mil)
APVDD
+V1.8S
L16
BLM21A121S_OPEN
C373
22uF_6.3v
C779
0.1uF_16v
C778
0.1uF_16v
C780
1000pF_50v
C355
0.1uF_16v
C767
0.1uF_16v
Close to Pin5
SD_CDZ
D17
BAT54C
XD_CDZ
MS_CDZ
VCC_MC
C764
10uF_6.3v
C766
1uF_6.3v
C765
1uF_6.3v
CN512
TAI_R015_B10_XX_40P
MS_BS_SD_CMD_SM_WEZ
MS_DATA1_SD_DAT1_SM_D1
MS_DATA0_SD_DAT0_SM_D0
MS_DATA2_SD_DAT2_SM_D2
MS_CDZ
MS_DATA3_SD_DAT3_SM_D3
MS_CLK_SD_CLK_SM_CEZ
SM_D7
SM_D6
SM_D5
SM_D4
MS_DATA3_SD_DAT3_SM_D3
MS_BS_SD_CMD_SM_WEZ
MS_CLK_SD_CLK_SM_CEZ
MS_DATA0_SD_DAT0_SM_D0
MS_DATA1_SD_DAT1_SM_D1
MS_DATA2_SD_DAT2_SM_D2
SD_CDZ
SD_WP_SM_ELWPZ
R742
22_5%
XD_CDZ
SM_RBZ
SM_REZ
MS_CLK_SD_CLK_SM_CEZ
SM_CLE
SM_ALE
MS_BS_SD_CMD_SM_WEZ
SD_WP_SM_ELWPZ
MS_DATA0_SD_DAT0_SM_D0
MS_DATA1_SD_DAT1_SM_D1
MS_DATA2_SD_DAT2_SM_D2
MS_DATA3_SD_DAT3_SM_D3
SM_D4
SM_D5
SM_D6
SM_D7
INVENTEC
TITLE
KiliManjaro 2.0(Montevina)
CardReader
SIZE A3
CODE CS
DOC. NUMBER 1310A2207301-0-M102
REV
SHEET 39 OF 58
CHANGE by Drawer_Name
6-Jun-2008
http://hobi-elektronika.net

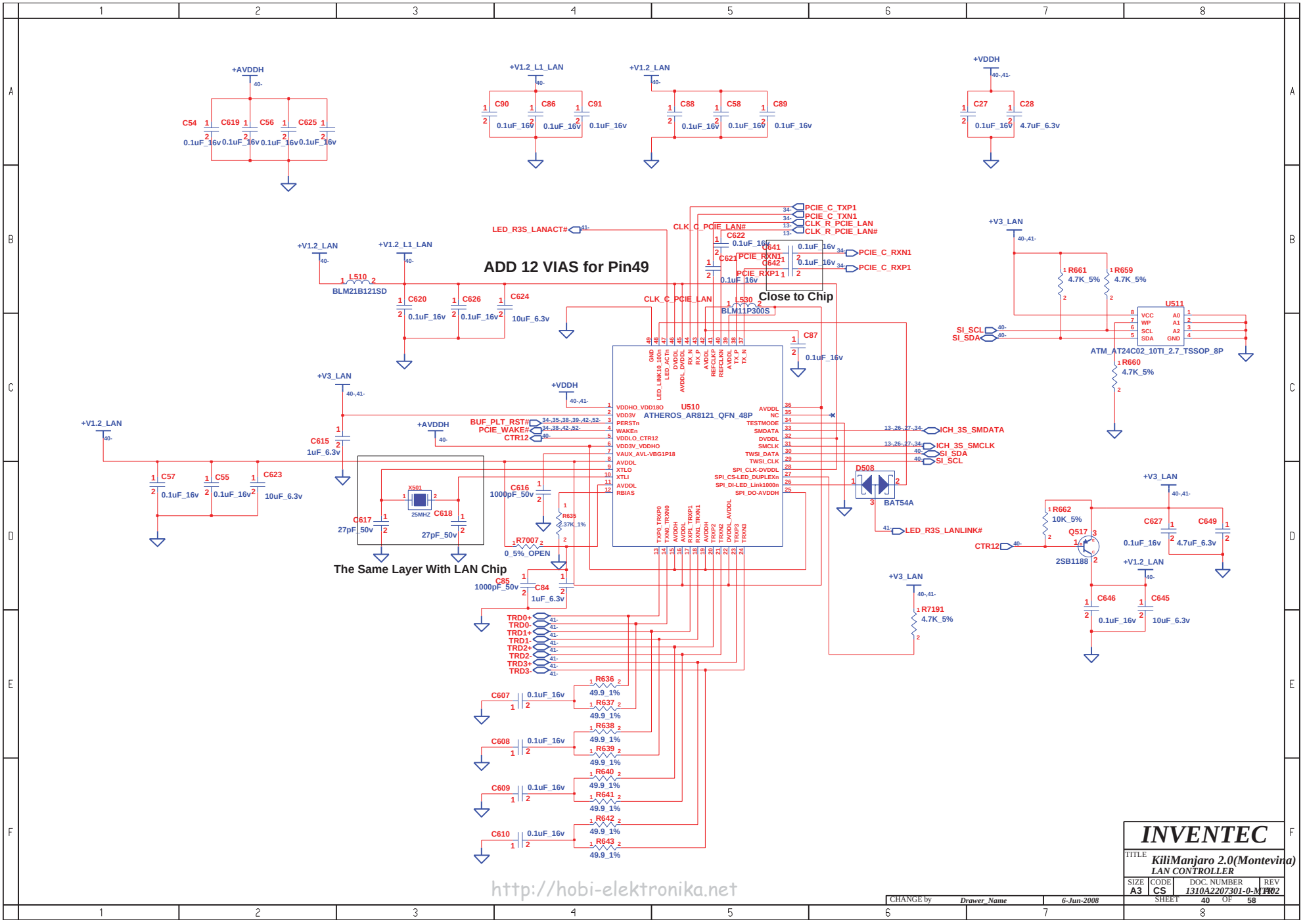
ADD 12 VIAS for Pin49
Close to Chip
The Same Layer With LAN Chip
U510
ATHEROS_AR8121_QFN_48P
U511
ATM_AT24C02_10TI_2.7_TSSOP_8P
L510
BLM21B121SD
L530
BLM11P300S
D508
BAT54A
Q517
2SB1188
X501
25MHZ
+AVDDH
+V1.2_L1_LAN
+V1.2_LAN
+VDDH
+V3_LAN
PCIE_C_TXP1
PCIE_C_TXN1
CLK_R_PCIE_LAN
CLK_R_PCIE_LAN#
PCIE_C_RXN1
PCIE_C_RXP1
CLK_C_PCIE_LAN#
CLK_C_PCIE_LAN
LED_R3S_LANACT#
BUF_PLT_RST#
PCIE_WAKE#
CTR12
ICH_3S_SMDATA
ICH_3S_SMCLK
SI_SDA
SI_SCL
LED_R3S_LANLINK#
TRD0+
TRD0-
TRD1+
TRD1-
TRD2+
TRD2-
TRD3+
TRD3-
http://hobi-elektronika.net
INVENTEC
TITLE
KiliManjaro 2.0(Montevina)
LAN CONTROLLER
SIZE A3
CODE CS
DOC. NUMBER 1310A2207301-0-M1
REV 02
SHEET 40 OF 58
CHANGE by Drawer_Name
6-Jun-2008

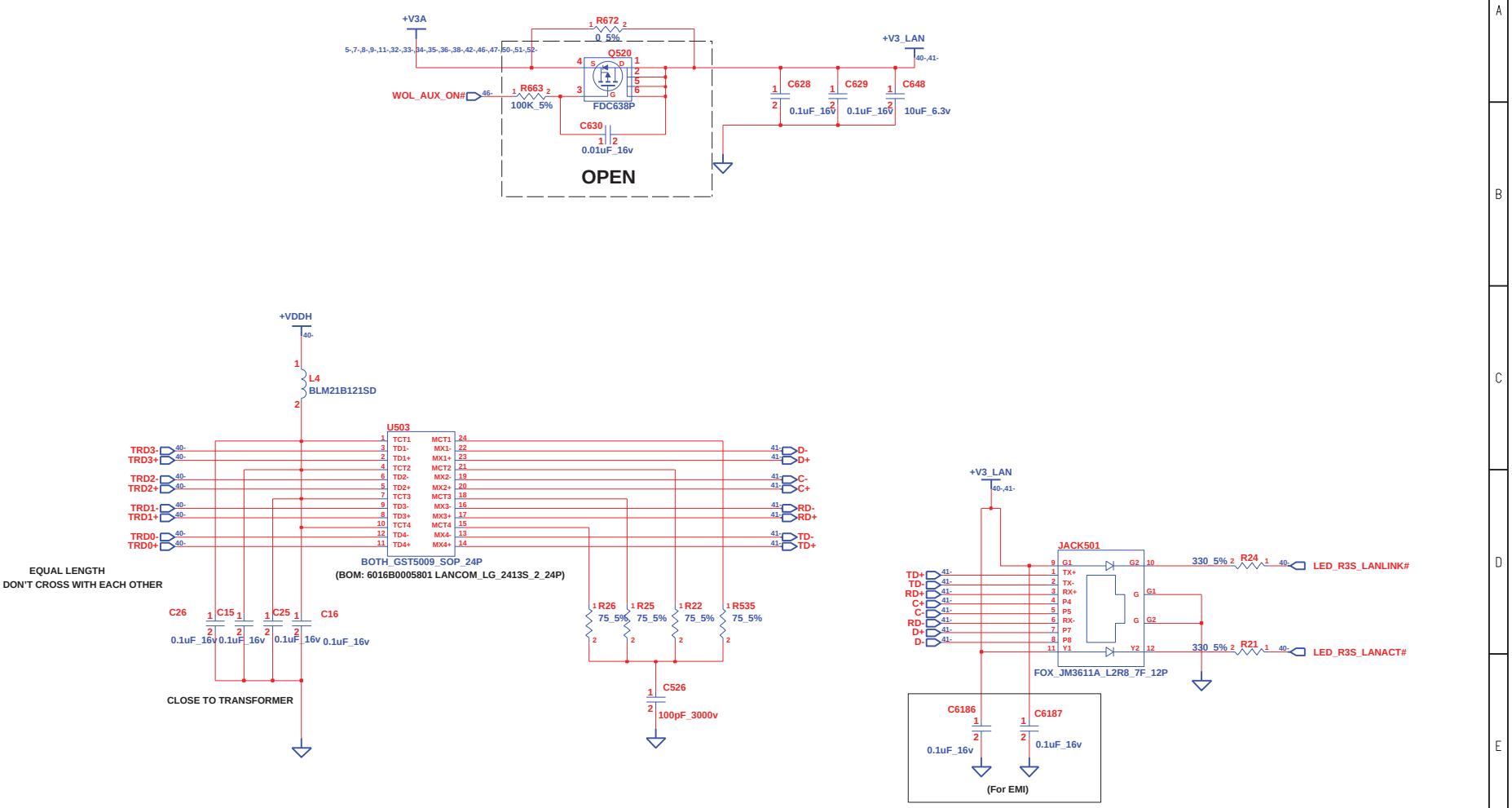

http://hobi-elektronika.net

CHANGE by	Drawer_Name	6-Jun-2008	

INVENTEC

TITLE: *KiliManjaro 2.0(Montevina) RJ45 CONN*

SIZE	CODE	DOC. NUMBER	REV
A3	CS	1310A2207301-0-M1-02	1.0

SHEET 41 OF 58

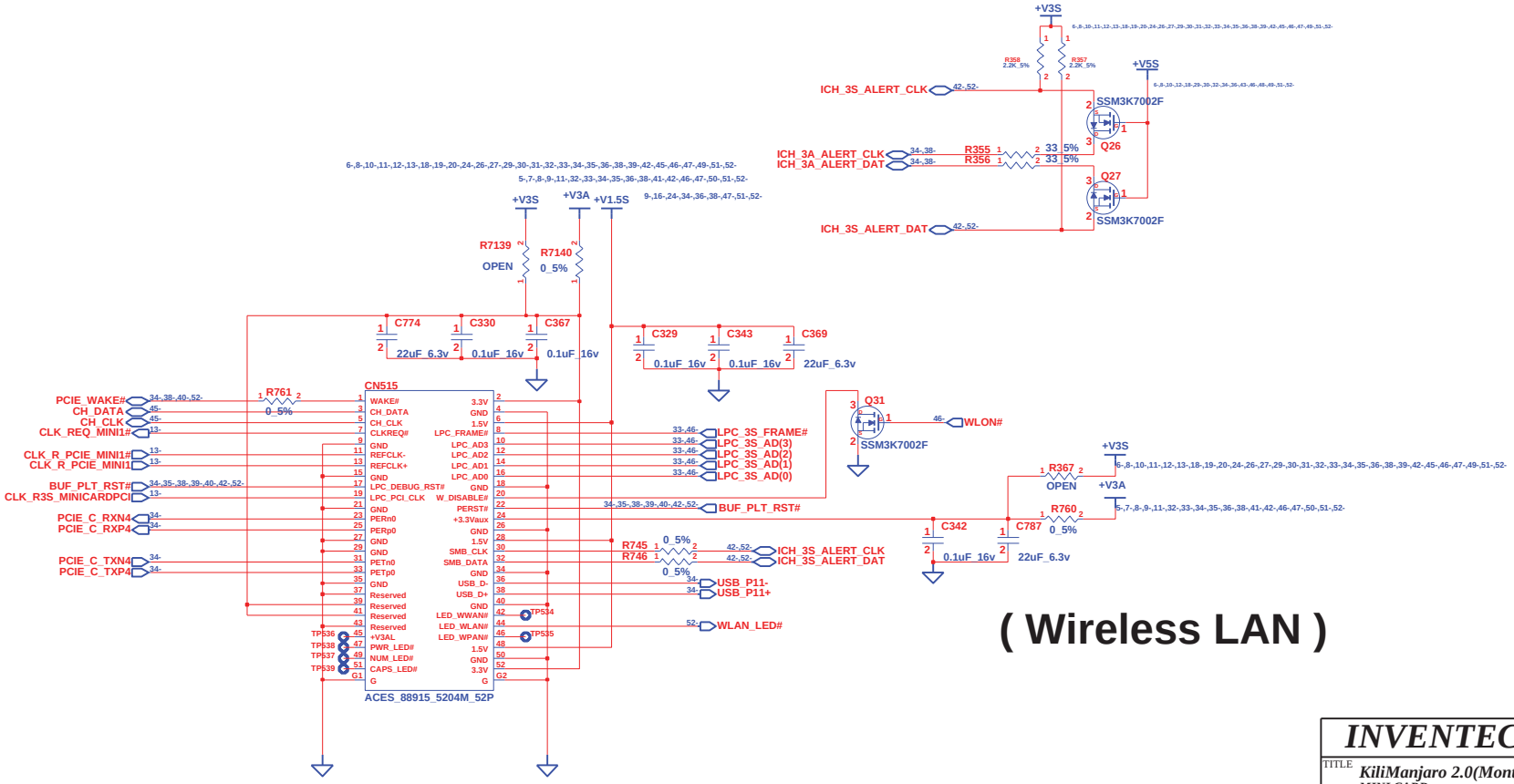

(Wireless LAN)

http://hobi-elektronika.net

INVENTEC			
TITLE: KiliManjaro 2.0(Montevina) MINI CARD			
SIZE A3	CODE CS	DOC. NUMBER 1310A2207301-0-M1002	REV
CHANGE by Drawer_Name	6-Jun-2008	SHEET 42 OF 58	

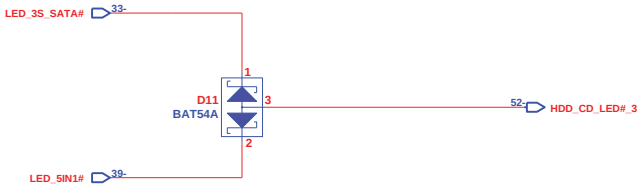

HDD

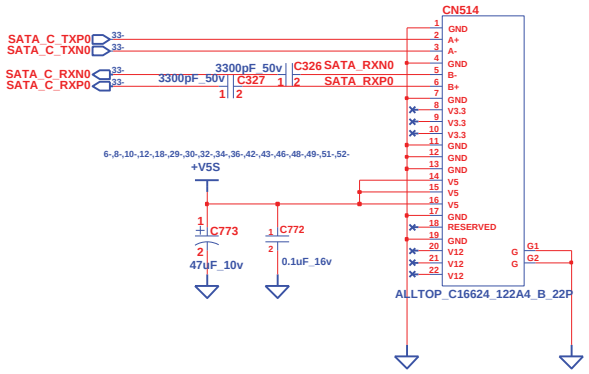

ODD

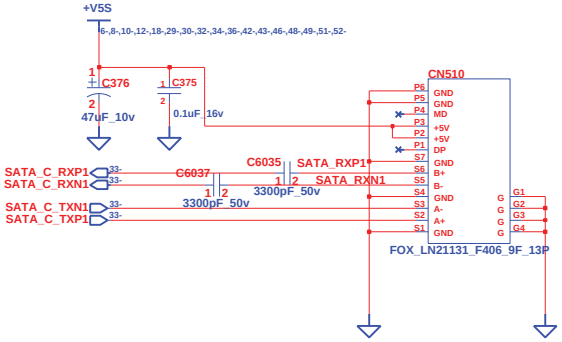

SATA ODD CONN

http://hobi-elektronika.net

INVENTEC			
TITLE	KiliManjaro 2.0(Montevina) ODD & HDD CONN		
SIZE A3	CODE CS	DOC. NUMBER 1310A2207301-0-M1-02	REV P02
CHANGE by Drawer_Name	6-Jun-2008	SHEET 43 OF 58	

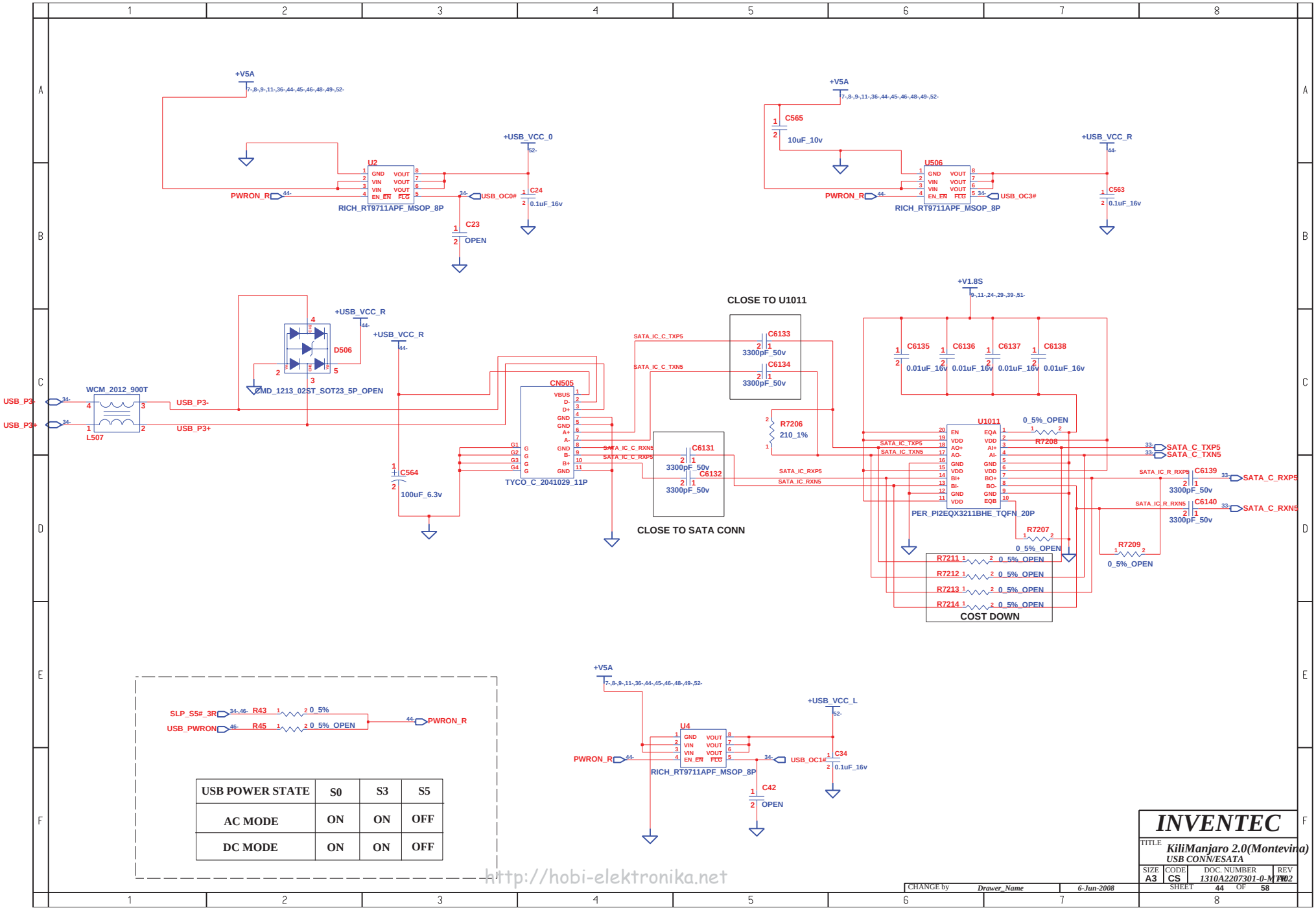

USB POWER STATE	S0	S3	S5
AC MODE	ON	ON	OFF
DC MODE	ON	ON	OFF

http://hobi-elektronika.net

INVENTEC

TITLE: KiliManjaro 2.0(Montevina)
USB CONN/ESATA

SIZE	CODE	DOC. NUMBER	REV
A3	CS	1310A2207301-0-M02	1.02

CHANGE by Drawer_Name 6-Jun-2008 SHEET 44 OF 58

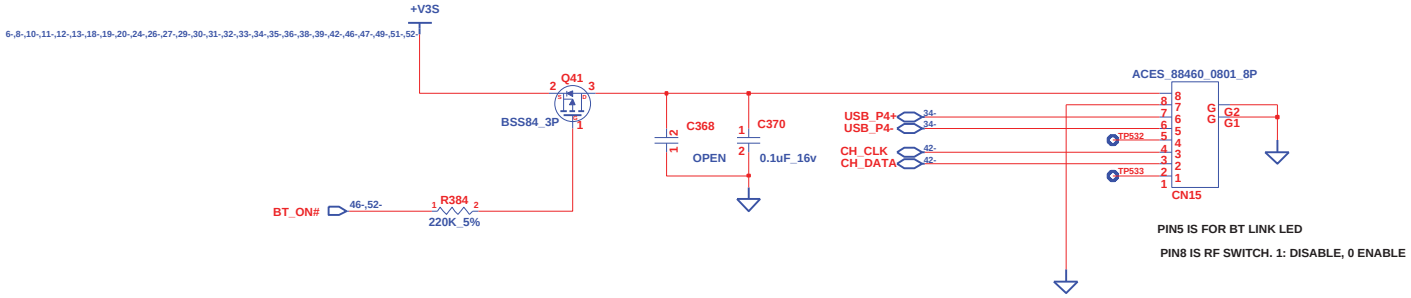

BLUE TOOTH

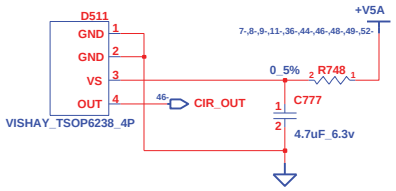

CIR

http://hobi-elektronika.net

CHANGE by	Drawer_Name	6-Jun-2008	

INVENTEC

TITLE *KiliManjaro 2.0(Montevina)* *BLUETOOTH*

SIZE	CODE	DOC. NUMBER	REV
A3	CS	1310A2207301-0-M1-02	1.0

SHEET 45 OF 58

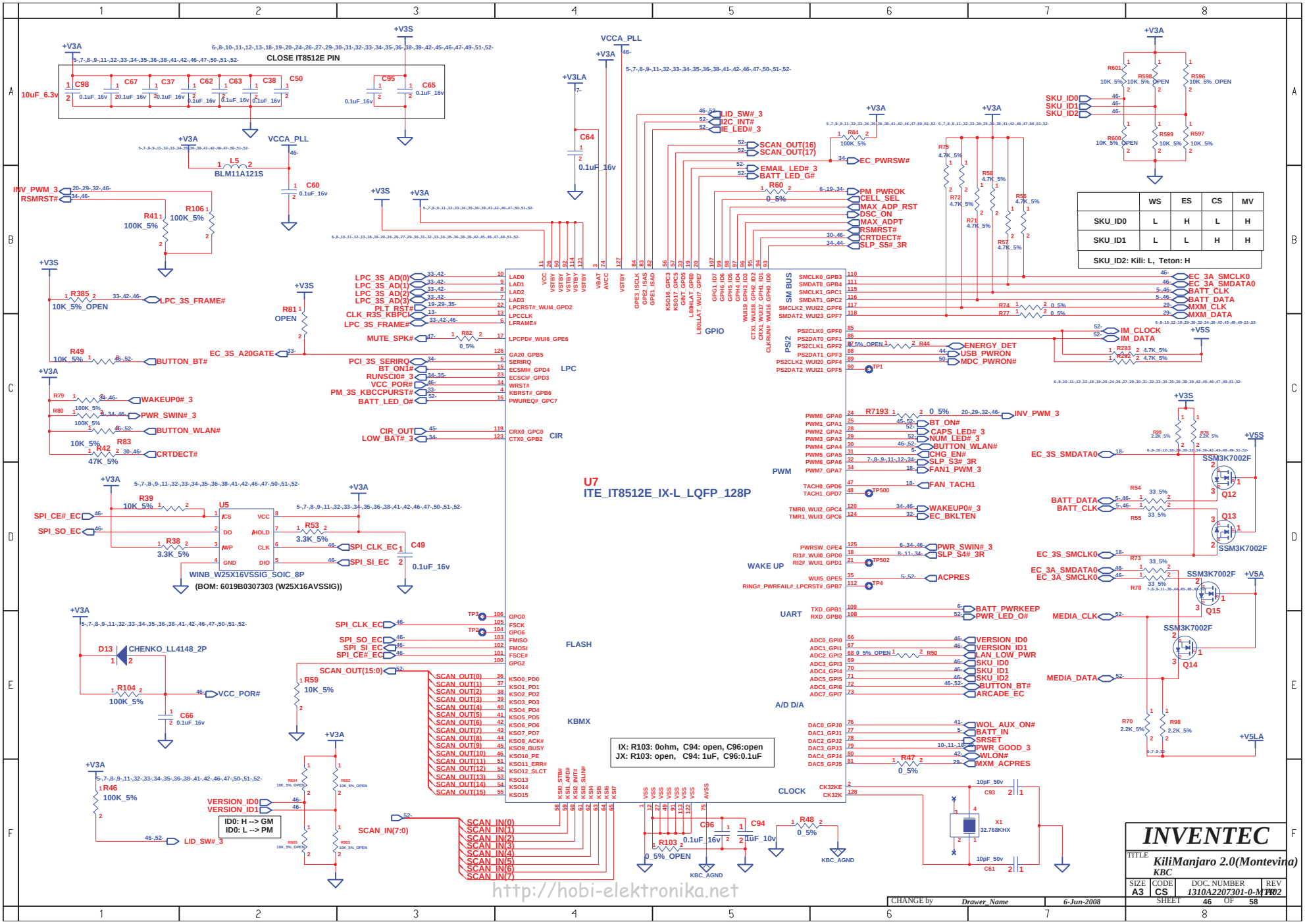
CLOSE IT8512E PIN
U7
ITE_IT8512E_IX-L_LQFP_128P
LPC
CIR
GPIO
SM BUS
PS/2
PWM
WAKE UP
UART
A/D D/A
FLASH
KBMX
CLOCK
U5
WINB_W25X16VSSIG_SOIC_8P
(BOM: 6019B0307303 (W25X16AVSSIG))
IX: R103: 0ohm, C94: open, C96:open
JX: R103: open, C94: 1uF, C96:0.1uF
ID0: H --> GM
ID0: L --> PM
SKU_ID2: Kili: L, Teton: H
INVENTEC
KiliManjaro 2.0(Montevina)
KBC
SIZE A3
CODE CS
DOC. NUMBER 1310A2207301-0-MT02
REV 0.02
SHEET 46 OF 58
CHANGE by Drawer_Name
6-Jun-2008
http://hobi-elektronika.net

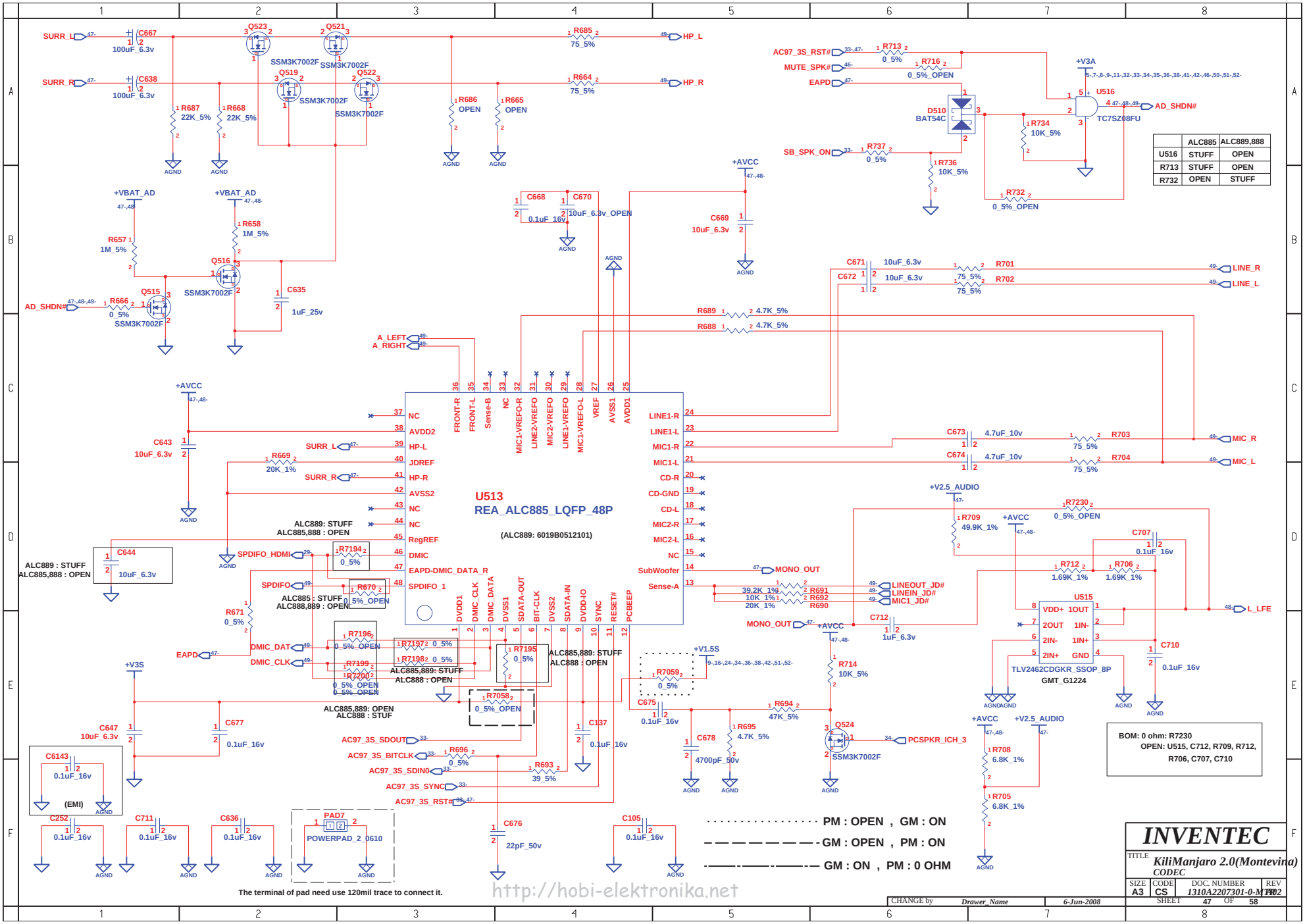

	ALC885	ALC889,888
U516	STUFF	OPEN
R713	STUFF	OPEN
R732	OPEN	STUFF

BOM: 0 ohm: R7230
OPEN: U515, C712, R709, R712, R706, C707, C710

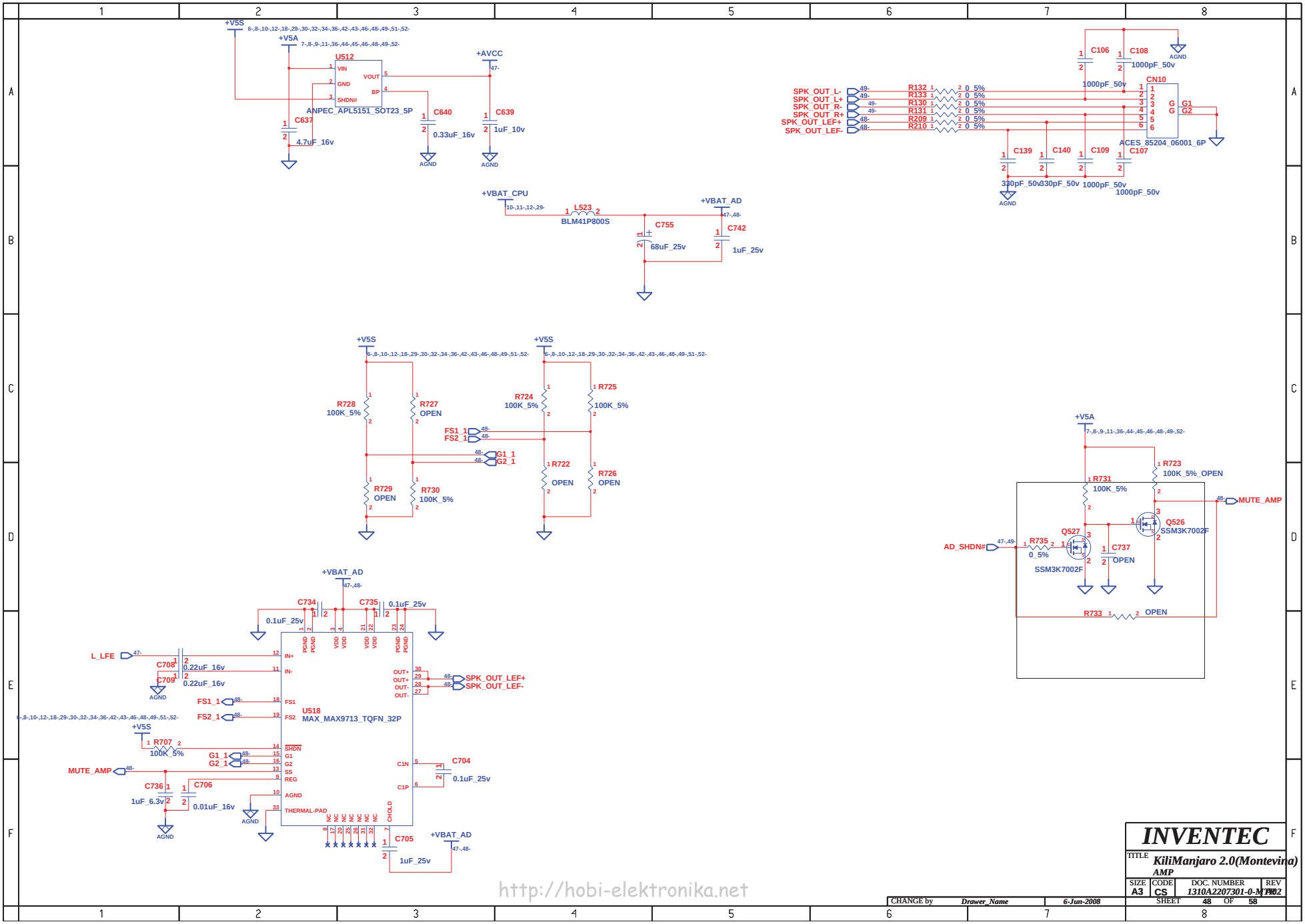

http://hobi-elektronika.net

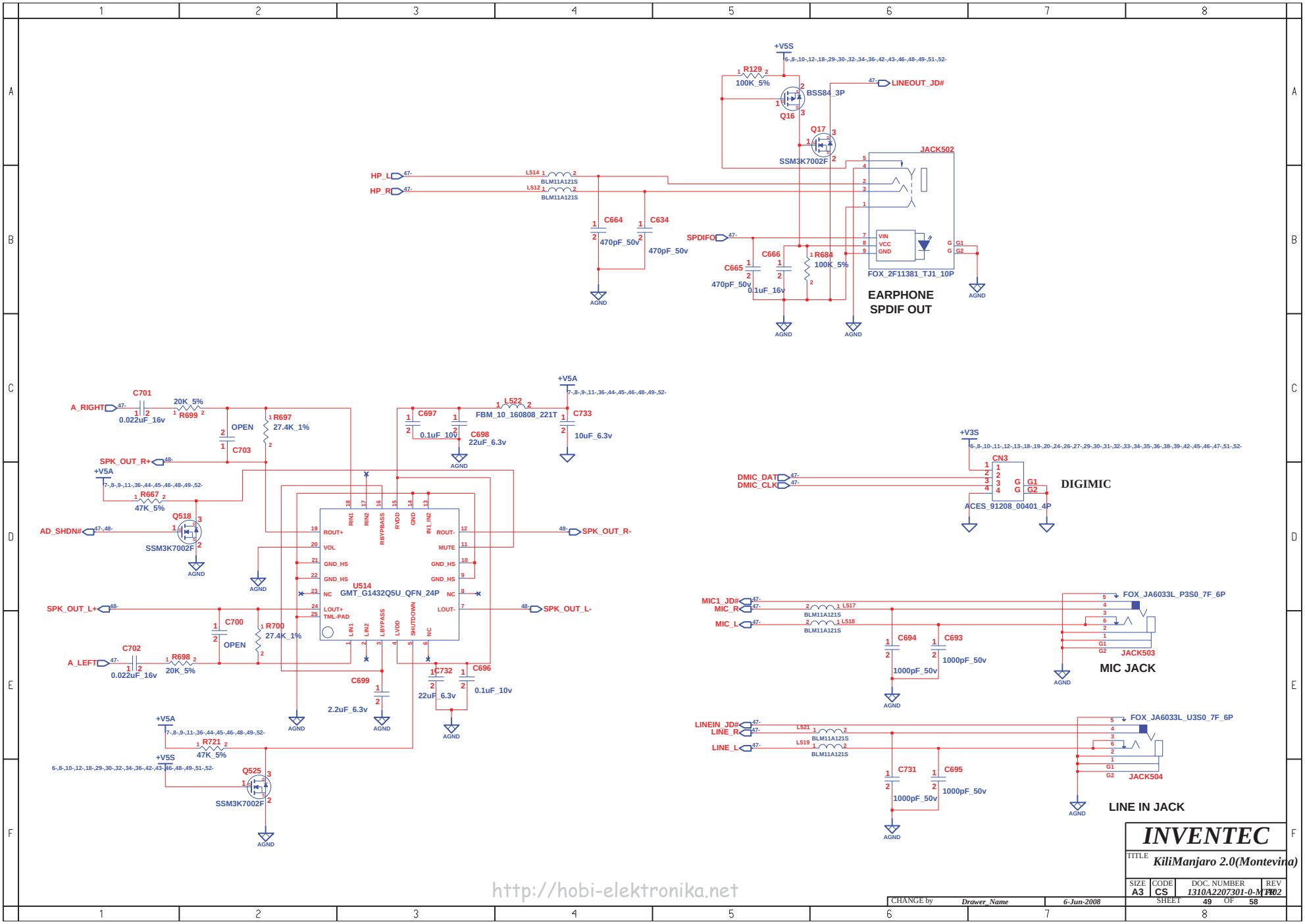

http://hobi-elektronika.net

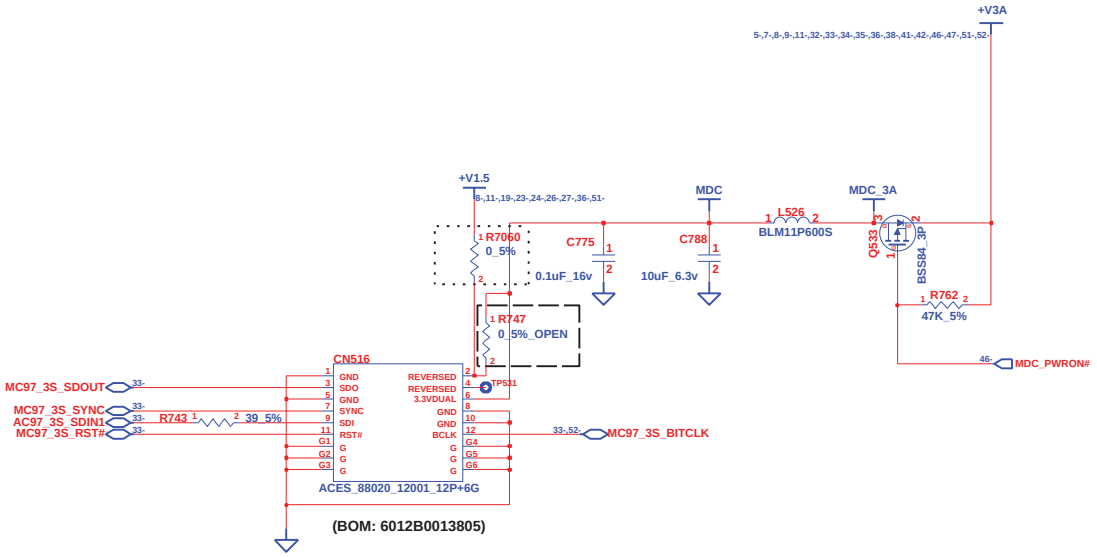

http://hobi-elektronika.net

CHANGE by	Drawer_Name	6-Jun-2008	

INVENTEC

TITLE: *KiliManjaro 2.0(Montevina)*
MDC

SIZE	CODE	DOC. NUMBER	REV
A3	CS	1310A2207301-0-M1-02	1.0

SHEET 50 OF 58

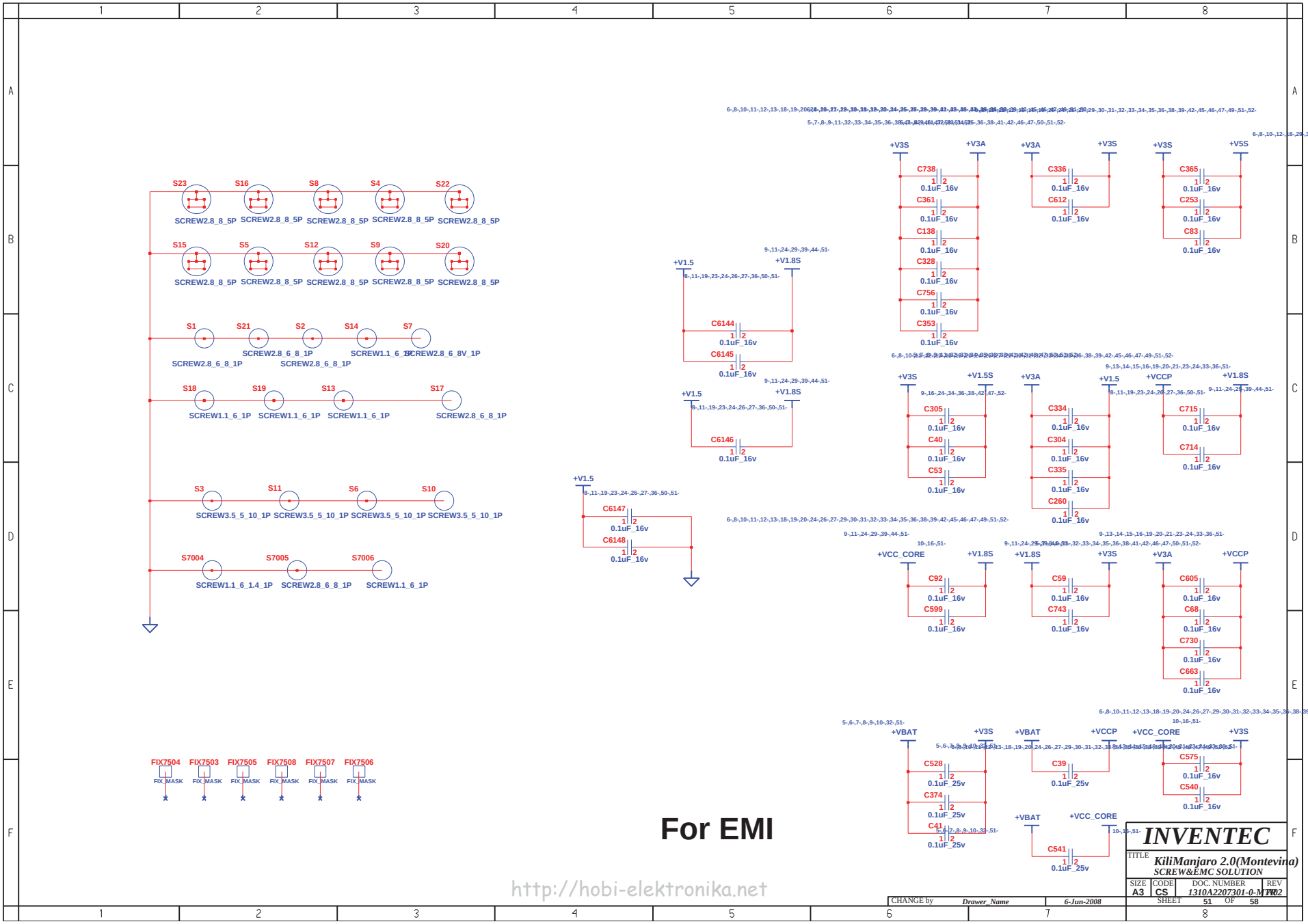

http://hobi-elektronika.net

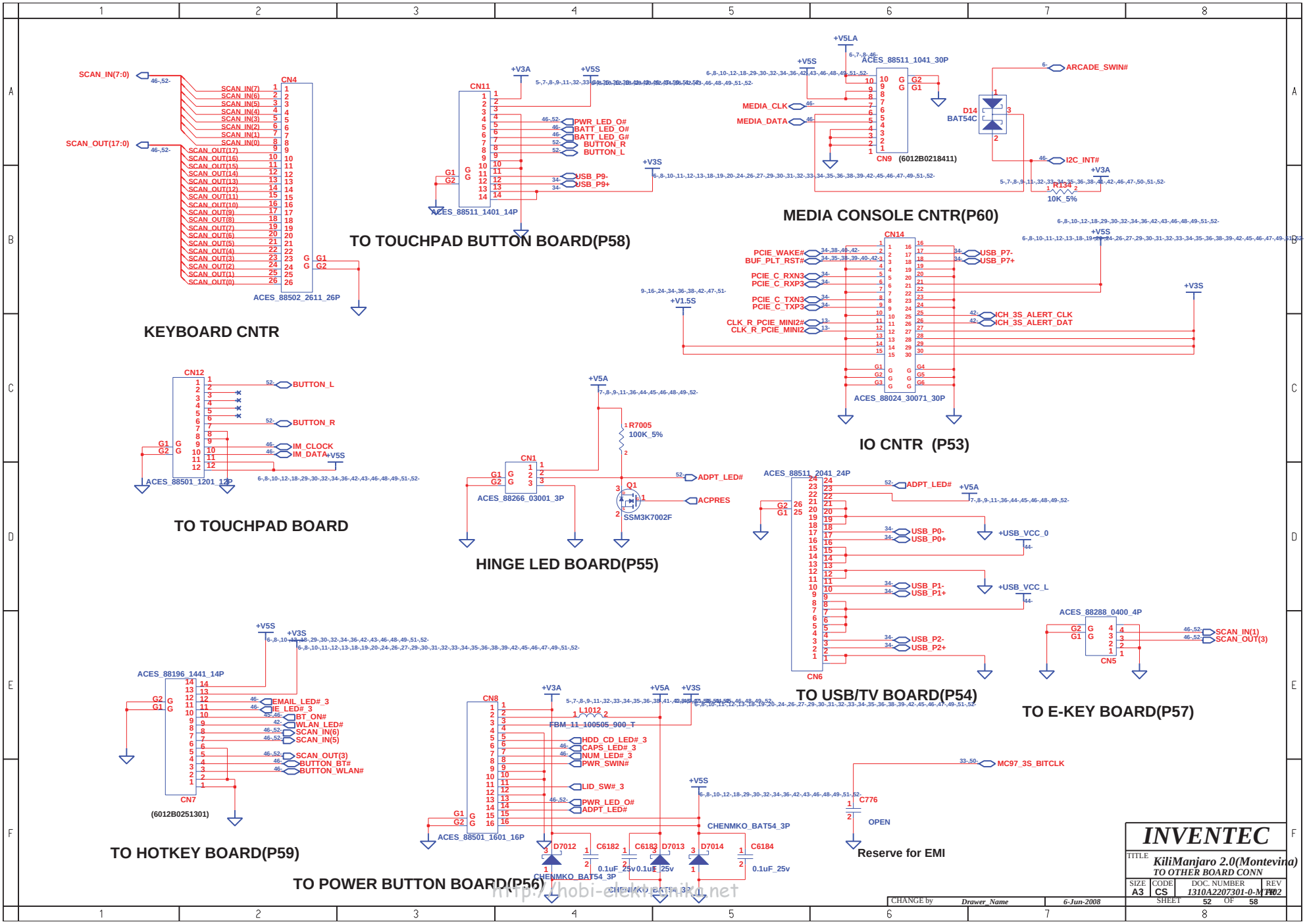
KEYBOARD CNTR
CN4
ACES_88502_2611_26P
SCAN_IN(7:0)
SCAN_OUT(17:0)
TO TOUCHPAD BUTTON BOARD(P58)
CN11
ACES_88511_1401_14P
PWR_LED_O#
BATT_LED_O#
BATT_LED_G#
BUTTON_R
BUTTON_L
USB_P9-
USB_P9+
MEDIA CONSOLE CNTR(P60)
ACES_88511_1041_30P
CN9 (6012B0218411)
MEDIA_CLK
MEDIA_DATA
ARCADE_SWIN#
I2C_INT#
D14
BAT54C
R134
10K_5%
IO CNTR (P53)
CN14
ACES_88024_30071_30P
PCIE_WAKE#
BUF_PLT_RST#
PCIE_C_RXN3
PCIE_C_RXP3
PCIE_C_TXN3
PCIE_C_TXP3
CLK_R_PCIE_MINI2#
CLK_R_PCIE_MINI2
USB_P7-
USB_P7+
ICH_3S_ALERT_CLK
ICH_3S_ALERT_DAT
TO TOUCHPAD BOARD
CN12
ACES_88501_1201_12P
BUTTON_L
BUTTON_R
IM_CLOCK
IM_DATA
HINGE LED BOARD(P55)
CN1
ACES_88266_03001_3P
R7005
100K_5%
Q1
SSM3K7002F
ADPT_LED#
ACPRES
TO USB/TV BOARD(P54)
ACES_88511_2041_24P
CN6
USB_P0-
USB_P0+
USB_P1-
USB_P1+
USB_P2-
USB_P2+
+USB_VCC_0
+USB_VCC_L
TO E-KEY BOARD(P57)
ACES_88288_0400_4P
CN5
SCAN_IN(1)
SCAN_OUT(3)
TO HOTKEY BOARD(P59)
ACES_88196_1441_14P
CN7
(6012B0251301)
EMAIL_LED#_3
IE_LED#_3
BT_ON#
WLAN_LED#
SCAN_IN(6)
SCAN_IN(5)
SCAN_OUT(3)
BUTTON_BT#
BUTTON_WLAN#
TO POWER BUTTON BOARD(P56)
CN8
ACES_88501_1601_16P
L1012
FBM_11_100505_900_T
HDD_CD_LED#_3
CAPS_LED#_3
NUM_LED#_3
PWR_SWIN#
LID_SW#_3
PWR_LED_O#
ADPT_LED#
CHENMKO_BAT54_3P
D7012
D7013
D7014
C6182
C6183
C6184
0.1uF_25v
MC97_3S_BITCLK
C776
OPEN
Reserve for EMI
INVENTEC
KiliManjaro 2.0(Montevina)
TO OTHER BOARD CONN
SIZE A3
CODE CS
DOC. NUMBER 1310A2207301-0-M1002
REV
SHEET 52 OF 58
CHANGE by Drawer_Name
6-Jun-2008
http://hobi-elektronik.net

IO BOARD

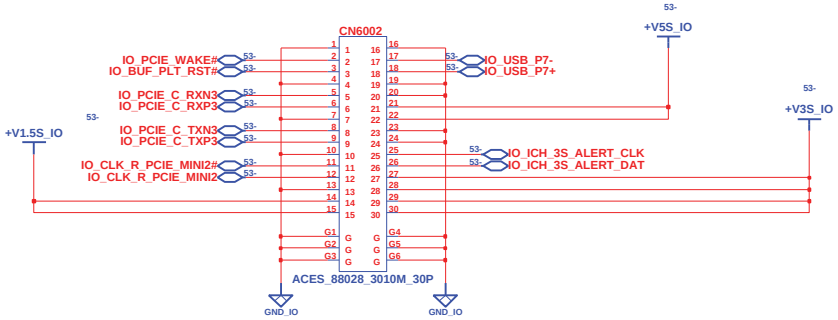

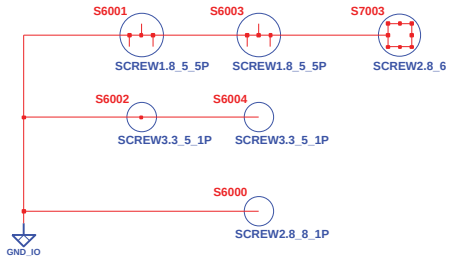

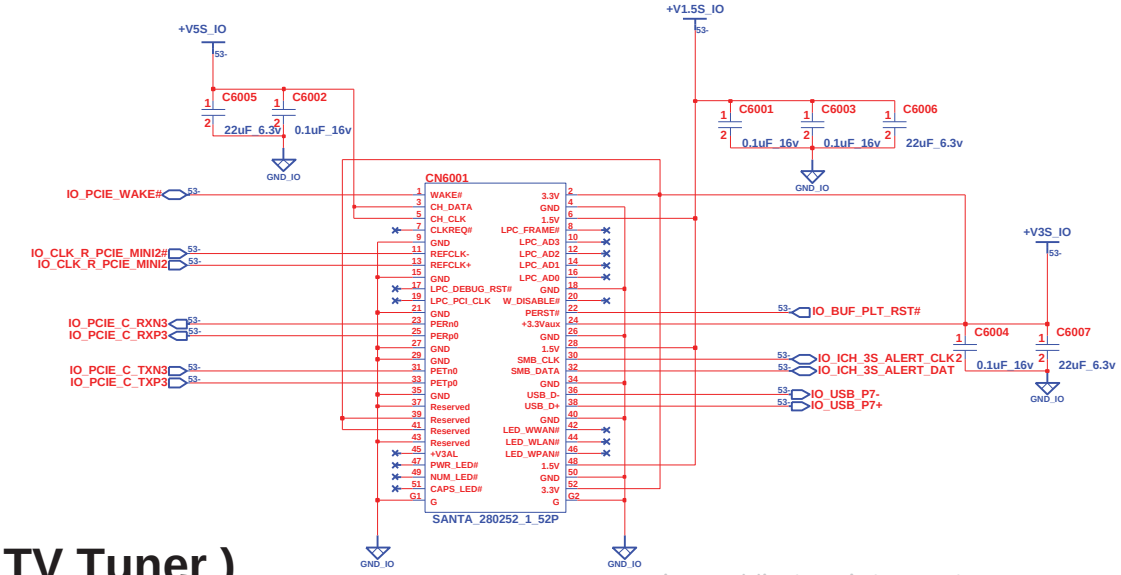

(TV Tuner)

http://hobi-elektronika.net

INVENTEC			
TITLE: KiliManjaro 2.0(Montevina) MEDIA BOARD			
SIZE A3	CODE CS	DOC. NUMBER 1310A2207301-0-MT02	REV 1.02
CHANGE by Drawer_Name	6-Jun-2008	SHEET 53 OF 58	

USB & TV BOARD

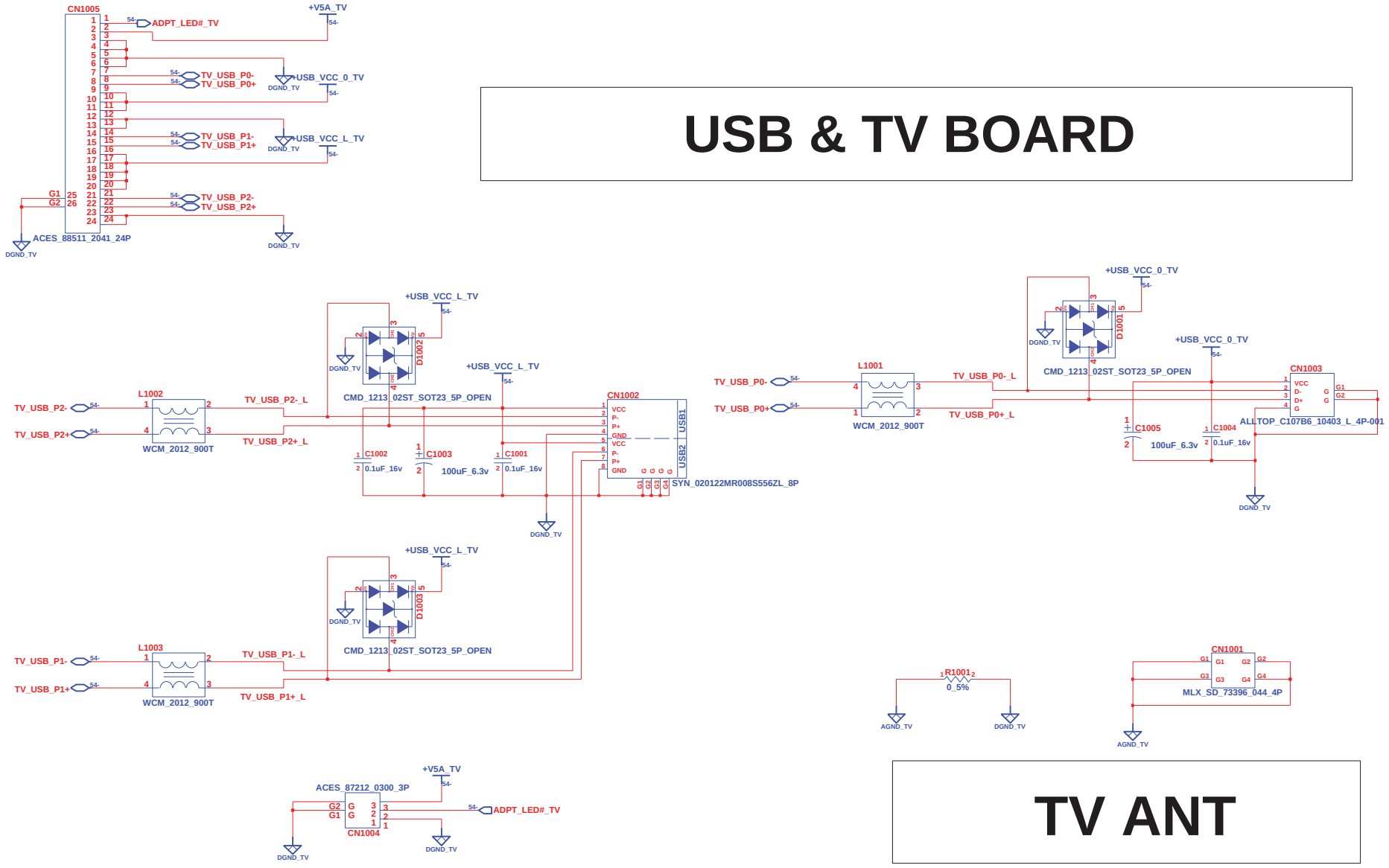

TV ANT

INVENTEC			
TITLE	KiliManjaro 2.0(Montevina) USB & TV BOARD		
SIZE A3	CODE CS	DOC. NUMBER 1310A2207301-0-M1002	REV
CHANGE by Drawer_Name	6-Jun-2008	SHEET 54 OF 58	

http://hobi-elektronika.net

HINGE LED Board 1

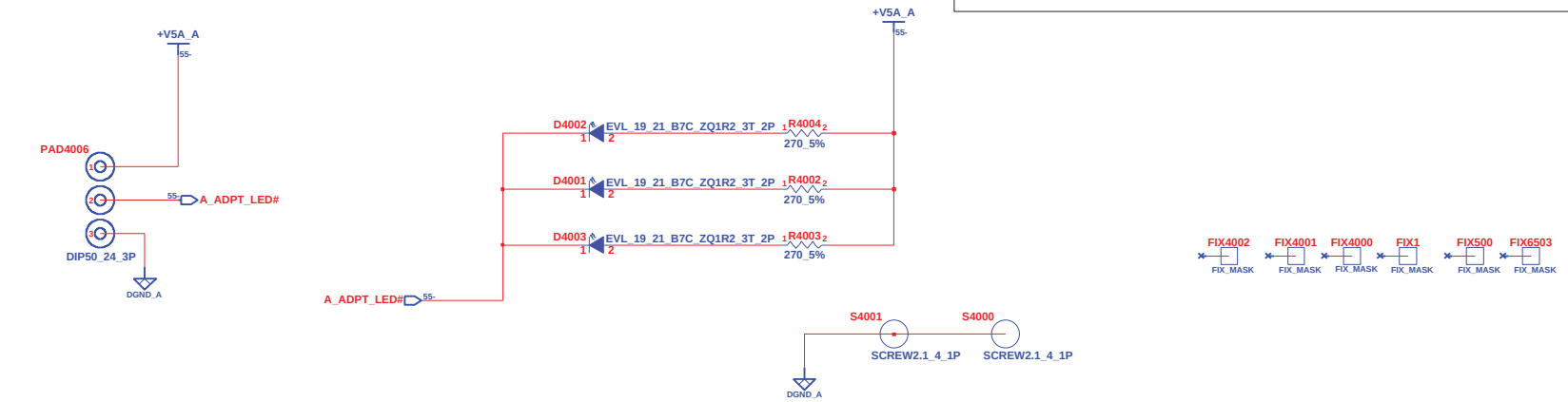

HINGE LED Board 2

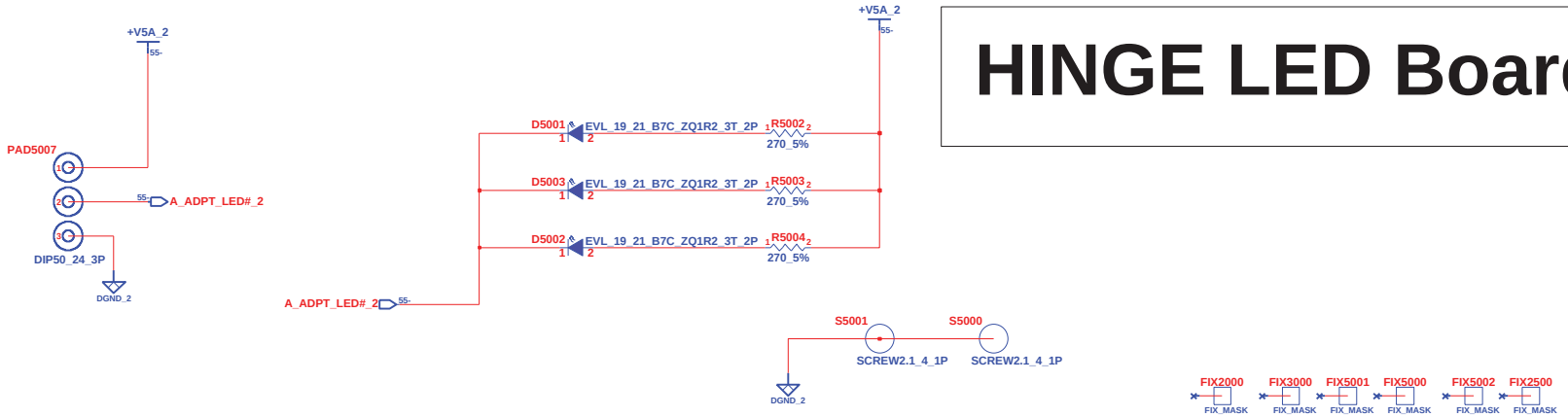

http://hobi-elektronika.net

INVENTEC			
TITLE	KiliManjaro 2.0(Montevina) PowerJack BOARD		
SIZE A3	CODE CS	DOC. NUMBER 1310A2207301-0-M1-02	REV
CHANGE by Drawer_Name	6-Jun-2008	SHEET 55 OF 58	

PowerButton Board

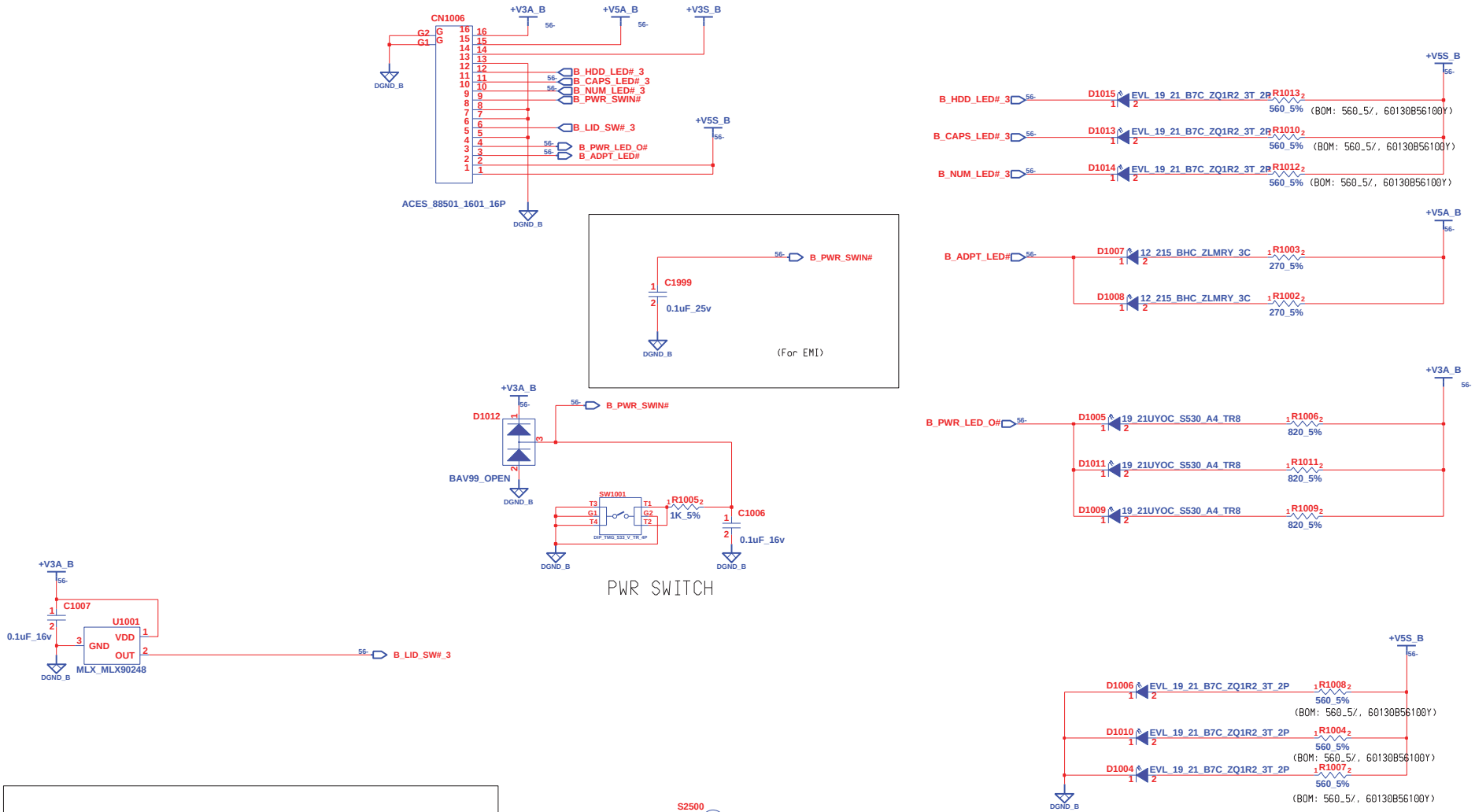

LID SWITCH

http://hobi-elektronika.net

INVENTEC			
TITLE	KiliManjaro 2.0(Montevina) PowerButton Board		
SIZE A3	CODE CS	DOC. NUMBER 1310A2207301-0-M/B	REV 102
CHANGE by Drawer_Name	6-Jun-2008	SHEET 56 OF 58	

E-KEY Board

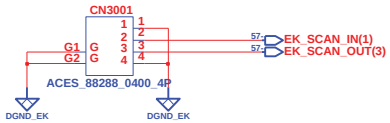

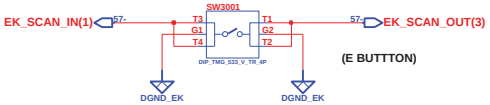

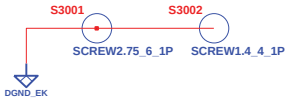

http://hobi-elektronika.net

CHANGE by	Drawer_Name	6-Jun-2008	

INVENTEC

TITLE *KiliManjaro 2.0(Montevina)*
E-KEY BOARD

SIZE	CODE	DOC. NUMBER	REV
A3	CS	1310A2207301-0-MT02	0.02

SHEET 57 OF 58

TouchButton Board

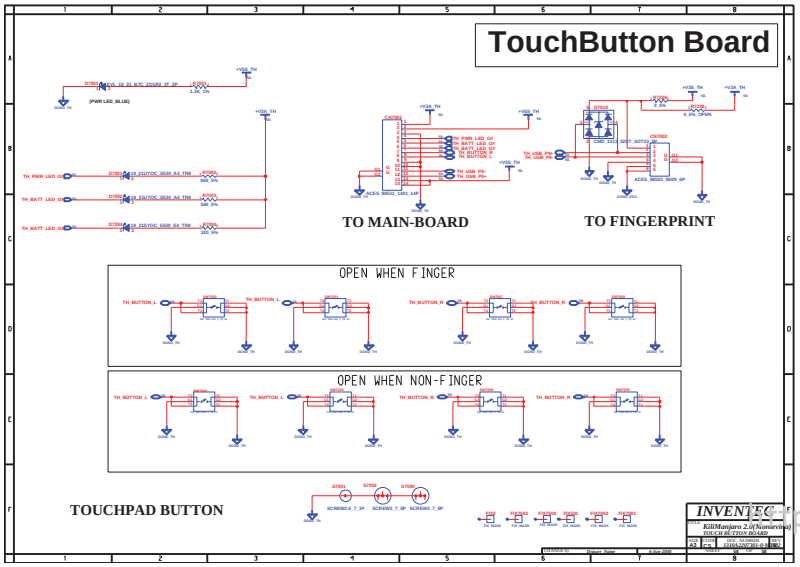

http://hobi-elektronika.net